AGENDA ITEM 7

Chris Coursey, Chair
Sonoma County Board of Supervisors

Mary Sackett, Vice Chair
Marin County Board of Supervisors

Janice Cader Thompson
Sonoma County Mayors' and Councilmembers Association

Kate Colin
Transportation Authority of Marin

Victoria Fleming
Sonoma County Mayors' and Councilmembers Association

Patty Garbarino
Golden Gate Bridge, Highway/Transportation District

Ariel Kelley
Sonoma County Mayors' and Councilmembers Association

Eric Lucan
Marin County Board of Supervisors

Mark Milberg
Transportation Authority of Marin

Barbara Pahre
Golden Gate Bridge, Highway/Transportation District

Gabe Paulson
Marin County Council of Mayors and Councilmembers

David Rabbitt
Sonoma County Board of Supervisors

Eddy Cumins
General Manager

5401 Old Redwood Highway
Suite 200
Petaluma, CA 94954
Phone: 707-794-3330
Fax: 707-794-3037
www.SonomaMarinTrain.org

August 20, 2025

Sonoma-Marin Area Rail Transit Board of Directors
5401 Old Redwood Highway, Suite 200
Santa Rosa, CA 94954

SUBJECT: Approve Agreement No. FR-BB-25-001 with Railworks Track Systems, LLC for Brazos Railroad Timber Bridge Repairs - Phase 2 in the amount of $604,235

Dear Board Members:

RECOMMENDATION:
Adopt Resolution No. 2025-23, authorizing the General Manager to execute Agreement No. FR-BB-25-001 with Railworks Track Systems, LLC for Brazos Railroad Timber Bridge Repairs - Phase 2 in the amount of $604,235

SUMMARY:
This construction contract repairs three (3) timber trestle bridges on the Brazos freight railroad branch between Novato and the Schellville Depot. The repairs are needed due to wear and tear over many years. The work includes repairing or replacing stringers, reconstructing frame bents, repairing walkways and railings.

These timber bridges are old and have been exposed to the elements for many years. These three timber trestles are the highest priority (in the poorest condition) as identified in the last annual bridge inspection report.

The three locations within this contract include:

1. MP B26.26 Novato Creek: Replace stringers.
2. MP B34.22 Sears Point Creek: Replace ties.
3. MP B37.76 Wingo Bridge (Sonoma Creek): Replace stringers, post piles, frame bents.

SMART issued an Invitation for Bid on May 27, 2025, to procure a Contractor to complete the required work. SMART received two bids on July 8, 2025. Railworks Track Systems, LLC submitted the lowest responsive and responsible bid.

Staff recommends adopting Resolution 2025-23 authorizing the General Manager to execute Contract No. FR-BB-25-001 Brazos Railroad Timber Bridge Repairs - Phase 2 with Railworks Track Systems, LLC in an amount of $604,235.

FISCAL IMPACT: Budget for this work is included in Budget Amendment #2 which is being presented to the Board of Directors for adoption at the August 20, 2025, meeting.

REVIEWED BY: [x] Finance ___/s/_____ [x] Counsel _____/s/_____

Very truly yours,

/s/
Bill Gamlen, P.E.
Chief Engineer

cc: Heather McKillop

Attachment(s):
1) Resolution Number 2025-23
2) Agreement FR-BB-25-001

Resolution No. 2025-23
Sonoma-Marin Area Rail Transit District
August 20, 2025

RESOLUTION OF THE BOARD OF DIRECTORS OF THE SONOMA-MARIN AREA RAIL TRANSIT DISTRICT APPROVING CONTRACT NO. FR-BB-25-001 WITH RAILWORKS TRACK SYSTEMS, LLC FOR BRAZOS RAILROAD TIMBER BRIDGE REPAIRS – PHASE 2

WHEREAS, the Sonoma-Marin Area Rail Transit District (SMART) owns the track between Novato to just east of the Napa River (Brazos Branch); and

WHEREAS, SMART issued an Invitation for Bid on May 27, 2025, to procure a Contractor to make repairs to three timber bridges on the Brazos Branch; and

WHEREAS, SMART received two (2) bids on July 8, 2025; and

WHEREAS, SMART determined that Railworks Track Systems, LLC was the lowest responsive and responsible bidder; and

NOW, THEREFORE, BE IT RESOLVED THAT THE BOARD OF DIRECTORS OF SMART HEREBY FINDS, DETERMINES, DECLARES, AND ORDERS AS FOLLOWS:

1. The forgoing Recitals are true and correct and are incorporated herein and form a part of this Resolution.
2. Authorize the General Manager to execute Contract No. FR-BB-25-001 with Railworks Track Systems, LLC, for an amount of $604,235.00

PASSED AND ADOPTED at a regular meeting of the Board of Directors of the Sonoma-Marin Area Rail Transit District held on the 20th day of August 2025, by the following vote:

DIRECTORS:
AYES:
NOES:
ABSENT:
ABSTAIN:

_____
Chris Coursey, Chair, Board of Directors
Sonoma-Marin Area Rail Transit District

ATTEST:

_____
Samantha Frias, Interim Clerk of the Board of Directors
Sonoma-Marin Area Rail Transit District

DOCUMENT 00 52 00
AGREEMENT FOR CONTRACTOR SERVICES

This agreement ("Agreement"), dated as of August 20, 2025 ("Effective Date") is by and between the Sonoma-Marin Area Rail Transit District, a Special District of the State of California (hereinafter "SMART"), and RailWorks Partners LP dba RailWorks Track Systems, LLC, whose place of business is located at 5 Penn Plaza, 15th Floor, New York, NY 10001 (hereinafter "Contractor").

BRAZOS RAILROAD TIMBER BRIDGE REPAIRS – PHASE II
CONTRACT # FR-BB-25-001

NOW, THEREFORE, in consideration of the mutual covenants hereinafter set for, Contractor and SMART agree as follows:

A G R E E M E N T

ARTICLE 1. LIST OF EXHIBITS

Section 1.01 The following exhibits are attached hereto and incorporated herein:

(a) Exhibit A: Schedule of Rates

(b) Exhibit B: State of California Requirements

ARTICLE 2. WORK.

Section 2.01 Contractor shall complete all work specified in the Contract Documents, in accordance with the Specifications, Drawings, and all other terms and conditions of the Contract Documents.

ARTICLE 3. NOTICES TO SMART.

Section 3.01 SMART has designated John Riley, Project Manager, to act as SMART's Representative(s), who will represent SMART in performing SMART's duties and responsibilities and exercising SMART's rights and authorities in Contract Documents. SMART may change the individual(s) acting as SMART's Representative(s), or delegate one or more specific functions to one or more specific SMART's Representatives, including without limitation engineering, architectural, inspection and general administrative functions, at any time with written notice and without liability to Contractor. Each SMART Representative is the beneficiary of all Contractor obligations to SMART, including without limitation, all releases and indemnities.

Section 3.02 All notices or demands to SMART under the Contract Documents shall be to SMART's Representative at: **5401 Old Redwood Hwy Suite 200, Petaluma, CA, 94954** or to such other person(s) and address(es) as SMART shall provide to Contractor.

Project Manager: John Riley
Phone: 707-794-3070
Email: jriley@sonomamarintrain.org

ARTICLE 4. CONTRACT TIME AND LIQUIDATED DAMAGES.

Section 4.01 Contract Time and Notice to Proceed. This project is expected to take no more than seven (7) working days. The Contract Time allotted is one hundred and eighty (180) calendar days.

Contract Time (the period between the start date identified in the Notice to Proceed with construction and the Substantial Completion date identified in the Notice to Proceed or as subsequently amended by a Change Order) commences on the date established in the Notice to Proceed. SMART reserves the right to modify or alter the Commencement Date of the Work. SMART may give a Notice to Proceed at any time within 60 Days after the Notice of Award. Contractor shall not do any Work at the Site prior to the date on which the Contract Time commences to run.

Contractor shall achieve Substantial Completion of the project within one hundred and fifty (150) calendar days from the date the Notice to Proceed is issued.

Contractor shall achieve full project completion and final invoicing of the project within one hundred and eighty (180) calendar days following the date the Notice to Proceed is issued.

Contractor shall complete the Work so that a Final Inspection Report can be issued in accordance with Section 01770 (Contract Closeout).

Section 4.02 Liquidated Damages. SMART and contractor recognize that time is of the essence of this Agreement and that SMART will suffer financial loss (see Paragraph 3.3 below), if all or any part of the Work is not completed within the times specified above, plus any extensions thereof allowed in accordance with the Contract Documents. Consistent with Article 14 of Document 00 70 00 - General Conditions, Contractor and SMART agree that because of the nature of the Project, it would be impractical or extremely difficult to fix the amount of actual damages incurred by SMART because of a delay in completion of all or any part of the Work. Accordingly, SMART and Contractor agree that as liquidated damages for delay Contractor shall pay SMART:

a) $204.95 per hour for each hour that freight service is interrupted. The per hour liquidated damage rate will be assessed on an hourly basis for the first eight hours of delay. The per hour rate will be on whole hour increments and is rounded up to the next hour.

b) If freight service is interrupted for more than 8 hours in a given day, a per day liquidated damage assessment of $4,918.89 will apply instead of the per hour liquidated damage rate.

Liquidated damages for delay shall only cover project administrative (such as Project management and consultant expenses) and cost damages suffered by SMART as a result of delay. Liquidated damages shall not cover the cost of completion of the Work, damages resulting from Defective Work, lost revenues, or damages suffered by others who then seek to recover their damages from SMART (for example, delay claims of other contractors, subcontractors, tenants, or other third-parties), and defense costs thereof.

ARTICLE 5. CONTRACT SUM.

Section 5.01 SMART shall pay Contractor the Contract Sum for completion of Work in accordance with the Contract Documents as follows:

Total Contract Sum: $604,235.00

The Contract Sum includes all allowances (if any).

Contractor agrees that 48 CFR Part 31, Contract Cost Principles and Procedures and 2 CFR Part 200 shall be used to determine the allowability of individual terms of cost. Any costs for which payment has been made to the Contractor that are determined by subsequential audit to be unallowable under 48 CFR Part 31 or 2 CFR Part 200 are subject to repayment by the Contractor to SMART.

ARTICLE 6. CONTRACTOR REPRESENTATIONS.

In order to induce SMART to enter into this Agreement, Contractor makes the following representations and warranties:

Section 6.01 Contractor has visited the Site and has examined thoroughly and understood the nature and extent of the Contract Documents, Work, Site, locality, actual conditions, as-built conditions, all local conditions, and all federal, state and local laws and regulations that in any manner may affect cost, progress, performance or furnishing of Work or which relate to any aspect of the means, methods, techniques, sequences or procedures of construction to be employed by Contractor and safety precautions and programs incident thereto.

Section 6.02 Contractor has examined thoroughly and understood all reports of exploration and tests of subsurface conditions, as-built drawings, drawings, products specifications or reports, available for Bidding purposes, of physical conditions, including Underground Facilities, or which may appear in the Drawings. Contractor accepts the determination set forth in these Documents and Document 00 70 00 - General Conditions of the limited extent of the information contained in such materials upon which Contractor may be entitled to rely. Contractor agrees that, except for the information so identified,

Contractor does not and shall not rely on any other information contained in such reports and drawings.

Section 6.03 Contractor has conducted or obtained and has understood all such examinations, investigations, explorations, tests, reports and studies (in addition to or to supplement those referred to in Section 5.2 of this Document 00 52 00 - Agreement) that pertain to the subsurface conditions, as-built conditions, Underground Facilities and all other physical conditions at or contiguous to the Site or otherwise that may affect the cost, progress, performance or furnishing of Work, as Contractor considers necessary for the performance or furnishing of Work at the Contract Sum, within the Contract Time and in accordance with the other terms and conditions of the Contract Documents, including specifically the provisions of Document 00 70 00 - General Conditions; and no additional examinations, investigations, explorations, tests, reports, studies or similar information or data are or will be required by Contractor for such purposes.

Section 6.04 Contractor has correlated its knowledge and the results of all such observations, examinations, investigations, explorations, tests, reports and studies with the terms and conditions of the Contract Documents.

Section 6.05 Contractor has given SMART prompt written notice of all conflicts, errors, ambiguities, or discrepancies that it has discovered in or among the Contract Documents and as-built drawings and actual conditions and the written resolution thereof through Addenda issued by SMART is acceptable to Contractor.

Section 6.06 Contractor is duly organized, existing and in good standing under applicable state law, and is duly qualified to conduct business in the State of California.

Section 6.07 Contractor has duly authorized the execution, delivery and performance of this Agreement, the other Contract Documents and the Work to be performed herein. The Contract Documents do not violate or create a default under any instrument, agreement, order or decree binding on Contractor.

Section 6.08 Contractor has listed the following Subcontractors pursuant to the Subcontractor Listing Law, California Public Contract Code §4100 *et seq*.:

Name of Subcontractor and Location of Mill or Shop	Description of Work: Reference To Bid Items	Subcontractor's License No.
No Subcontractors	N/A	N/A

Section 6.09 Contractor has designated **Jerry Paul Onhiser**, **Project Manager**, to act as Contractor's Representative(s), who will represent Contractor in performing Contractor's duties and responsibilities and exercising Contractor's rights and authorities in Contract Documents. Contractor has also designated **Ken Parkus**, **Superintendent**, to act as Contractor's Superintendent. Contractor may change the individual(s) acting as Contractor's Representative(s), or delegate one or more specific

functions to one or more specific Contractor's Representatives, at any time upon prior written notice and approval and without liability to SMART, but Contractor is limited to two representatives.

Project Manager:	Jerry Paul Onhiser	Superintendent:	Ken Parkus
Phone:	330-720-5126	Phone:	678-373-9805
Email:	jonhiser@railworks.com	Email:	kparkus@railworks.com

ARTICLE 7. CONTRACTOR DOCUMENTS.

Section 7.01 Contract Documents consist of the following documents incorporated by reference, including all changes, Addenda, and Modifications thereto:

Document 00 52 00:	This Agreement
IFB:	Invitation for Bid
Document 00 70 00:	General Conditions
General Requirements:	General Requirements
Technical Specifications:	Technical Plans and Specifications

Section 7.02 There are no Contract Documents other than those listed in Section 7.01. The Contract Documents may only be amended, modified or supplemented as provided in Document 00 70 00 - General Conditions.

ARTICLE 8. INSURANCE.

Contractor shall procure and maintain for the duration of the Agreement insurance against all claims for injuries to persons or damages to property which may arise from or in connection with the performance of the work hereunder by the Contractor, its agents, representatives, employees, or subcontractors with limits and deductibles specified below:

Section 8.01 Workers' Compensation Insurance. Workers' Compensation as required by the State of California, with Statutory Limits, and Employer's Liability insurance with limit of no less than $1,000,000 per accident for bodily injury or disease.

Section 8.02 General Liability Insurance. Commercial General Liability insurance covering products-completed and ongoing operations, property damage, bodily injury and personal injury using an occurrence policy form, in an amount no less than $5,000,000 per occurrence. Said insurance shall remain in effect for five (5) years after Final Completion and acceptance of the final payment for the Work, contractual liability, and coverage for explosion, collapse, and underground hazards.

Said policy shall include a Railroads CG 24 17 endorsement removing the exclusion of coverage, if applicable, for bodily injury or property damage arising out of operations within 50 feet of any railroad property and affecting any railroad bridge, trestle, tracks, roadbeds, tunnel, underpass or crossing.

Section 8.03 Automobile Insurance. Automobile Liability insurance covering bodily injury and property damage in an amount no less than $5,000,000 combined single limit for each occurrence. Said insurance shall include coverage for owned, hired, and non-owned vehicles. Said policy shall also include a CA 20 70 10 13 endorsement removing the exclusion of coverage for bodily injury or property damage arising out of operations within 50 feet of any railroad bridge, trestle, track, roadbeds, tunnel, underpass or crossing.

Section 8.04 Contractor's Pollution Liability Insurance. Contractor's Pollution Liability Insurance in an amount no less than $2,000,000 per occurrence or claim. The Contractor's Pollution Liability policy shall be written on an occurrence basis with coverage for bodily injury, property damage and environmental damage, including cleanup costs arising out of third-party claims, for pollution conditions, and including claims of environmental authorities, for the release of pollutants caused by construction activities related to the Contract. Coverage shall include the Contractor as the named insured and shall include coverage for acts by others for whom the Contractor is legally responsible.

Coverage to be provided for bodily injury to or destruction of tangible property, including the resulting loss of use thereof, loss of use of tangible property that has been physically injured, and natural resource damage. There shall be no exclusions or limitations regarding damages or injury from existence, removal or abatement of lead paint. There shall be no insured vs. insured exclusion in the policy.

Section 8.05 Railroad Protective Liability Insurance. Prior to commencement of construction activities, Contractor shall procure and maintain Railroad Protective Liability insurance, in SMART's name, with limits of liability of no less than $5,000,000 per occurrence, for losses arising out of injury to or death of all persons, and for physical loss or damage to or destruction of property, including the loss of use thereof. The additional named insureds shall be the Sonoma-Marin Area Rail District.

Section 8.06 Endorsements. Prior to commencing work, Contractor shall file Certificate(s) of Insurance with SMART evidencing the required coverage and endorsement(s) and, upon request, a certified duplicate original of any of those policies. Said endorsements and Certificate(s) of Insurance shall stipulate:

(a) SMART, its officers, officials, employees, and volunteers are to be covered as additional insureds on the General Liability Insurance policy with respect to liability arising out of work or operations performed by or on behalf of the Contractor including materials, parts, or equipment furnished in connection with such work or operations and automobiles owned, leased, hired, or borrowed by or on behalf of the Contractor. General liability coverage can be provided in the form of an endorsement to the Contractor's insurance (at least as broad as ISO Form CG 20 10, CG 11 85 or both CG 20 10, CG 20 26, CG 20 33, or CG 20 38; and CG 20 37 forms if later revisions used).

(b) Additionally, SMART, its officers, and employees shall be named as additional insured on all other policies listed above, with the exception of the workers compensation insurance policy (as applicable).

(c) That the policy(ies) is Primary Insurance and the insurance company(ies) providing such policy(ies) shall be liable thereunder for the full amount of any loss or claim which Contractor is liable, up to and including the total limit of liability, without right of contribution from any other insurance effected or which may be effected by the Insureds.

(d) Inclusion of the Insureds as additional insureds shall not in any way affect its rights either as respects any claim, demand, suit or judgment made, brought or recovered against Contractor. Said policy shall protect Contractor and the Insureds in the same manner as though a separate policy had been issued to each, but nothing in said policy shall operate to increase the insurance company's liability as set forth in its policy beyond the amount or amounts shown or to which the insurance company would have been liable if only one interest had been named as an insured.

(e) Contractor hereby grants to SMART a waiver of any right to subrogation which any insurer of said Contractor may acquire against SMART by virtue of the payment of any loss under such insurance. Contractor agrees to obtain any endorsement that may be necessary to affect this waiver of subrogation, but this provision applies regardless of whether or not SMART has received a waiver of subrogation endorsement from the insurer.

(f) The insurance policy(ies) shall be written by an insurance company or companies acceptable to SMART. The insurance underwriter(s) for all insurance policies except Workers' Compensation shall have an A.M. Best Company rating of A VII or better. Such insurance company shall be authorized to transact business in the state of California. Required minimum amounts of insurance may be increased should conditions of Work, in opinion of SMART, warrant such increase. Contractor shall increase required insurance amounts upon direction by SMART.

Section 8.07 Deductibles and Retentions. Contractor shall be responsible for payment of any insurance premiums, including any charges for required waivers of subrogation or the endorsement of additional insured. Contractor shall also be responsible for the payment of all deductibles or retention on Contractor's policies without right of contribution from SMART.

Section 8.08 Injuries. If injury occurs to any employee of Contractor, Subcontractor or sub-subcontractor for which the employee, or the employee's dependents in the event of employee's death, is entitled to compensation from SMART under provisions of the Workers' Compensation Insurance and Safety Act, as amended, or for which compensation is claimed from SMART, SMART may retain out of sums due Contractor under Contract Documents, amount sufficient to cover such compensation, as fixed by the Act, as amended, until such compensation is paid, or until it is determined that no

compensation is due. If SMART is compelled to pay compensation, SMART may, in its discretion, either deduct and retain from the Contract Sum the amount so paid, or require Contractor to reimburse SMART.

Section 8.09 Subcontractor Responsibility. Contractor shall require and verify that subcontractors maintain insurance meeting all the requirements stated herein, and Contractor shall ensure SMART is named additional insured on insurance required from subcontractors.

Section 8.10 Claims Made Coverage. If any insurance specified above is written on a claims-made coverage form, Contractor shall:

(a) Ensure that the retroactive date is shown on the policy, and such date must be before the date of this Agreement or beginning of any work under this Agreement;

(b) Maintain and provide evidence of similar insurance for at least three (3) years following project completion, including the requirement of adding all additional insureds; and

(c) If insurance is cancelled or non-renewed, and not replaced with another claims-made policy form with a retroactive date prior to Agreement effective date, Contractor shall purchase "extending reporting" coverage for a minimum of three (3) years after completion of the work.

Section 8.11 Documentation. The following documentation shall be submitted to SMART:

(a) Properly executed Certificates of Insurance clearly evidencing all coverages and limits required above. Said Certificates shall be submitted prior to the execution of this Agreement. At SMART's request, Contractor shall provide certified copies of the policies that correspond to the policies listed on the Certificates of Insurance. Contractor agrees to maintain current Certificates of Insurance evidencing the above-required coverages and limits on file with SMART for the duration of this Agreement.

(b) Copies of properly executed endorsements required above for each policy. Said endorsement copies shall be submitted prior to the execution of this Agreement. Contractor agrees to maintain current endorsements evidencing the above-specified requirements on file with SMART for the duration of this Agreement.

(c) After the Agreement has been signed, signed Certificates of Insurance shall be submitted for any renewal or replacement of a policy that already exists, at least ten (10) days before expiration or other termination of the existing policy.

Please email all renewal certificates of insurance and corresponding policy documents to InsuranceRenewals@sonomamarintrain.org.

Section 8.12 Policy Obligations. Contractor's indemnity and other obligations shall not be limited by the foregoing insurance requirements.

Section 8.13 Material Breach. If Contractor, for any reason, fails to maintain insurance coverage, which is required pursuant to this Agreement, the same shall be deemed a material breach of this Agreement. SMART, in its sole option, may terminate this Agreement and obtain damages from Contractor resulting from said breach. Alternatively, SMART may purchase such required insurance coverage, and without further notice to Contractor, SMART may deduct from sums due to Contractor any premium costs advanced by SMART for such insurance. These remedies shall be in addition to any other remedies available to SMART.

Section 8.14 Notice of Cancellation. Each insurance policy required above shall provide that coverage shall not be cancelled, except with notice to SMART.

ARTICLE 9. MISCELLANEOUS.

Section 9.01 Terms and Abbreviations. Terms and abbreviations used in this Agreement are defined in Document 00 70 00 - General Conditions and Section 01420 (References and Definitions) and will have the meaning indicated therein.

Section 9.02 Use of Recycled Paper. SMART requires that all printing jobs produced under this Agreement be printed on recycled content papers. Recycled-content papers are defined as papers containing a minimum of 30 percent postconsumer fiber by weight. All papers used in the performance of a print job for SMART shall be recycled-content paper. If paper meets the 30 percent requirement, the recycling logo should be printed on the project.

Section 9.03 Signers of this Agreement. It is understood and agreed that in no instance are the persons signing this Agreement for or on behalf of SMART or acting as an employee, agent, or representative of SMART, liable on this Agreement or any of the Contract Documents, or upon any warranty of authority, or otherwise, and it is further understood and agreed that liability of the SMART is limited and confined to such liability as authorized or imposed by the Contract Documents or applicable law.

Section 9.04 No Assignment of Contract. Contractor shall not assign any portion of the Contract Documents, and may subcontract portions of the Contract Documents only in compliance with the Subcontractor Listing Law, California Public Contract Code §4100 *et seq*.

Section 9.05 Assignment of Rights to Awarding Body. In entering into a public works contract or a subcontract to supply goods, services or materials pursuant to a public works contract, Contractor or Subcontractor offers and agrees to assign to the awarding body all rights, title and interest in and to all causes of action it may have under Section 4 of the Clayton Act (15 U.S.C. §15) or under the Cartwright Act (Chapter 2 (commencing with Section 16700) of Part 2 of Division 7 of the Business and Professions Code), arising from purchases of goods, services or materials pursuant to the public works

contract or the subcontract. This assignment shall be made and become effective at the time SMART tenders final payment to Contractor, without further acknowledgment by the parties.

Section 9.06 Prevailing Wages. Contractor and all Subcontractors shall pay to all workers employed not less than the prevailing rate of wages as determined in accordance with the Labor Code as indicated herein.

All Contractors, contractors, and subcontractors doing business with public agencies through the State of California (including SMART) shall comply with applicable labor compliance requirements including, but not limited to prevailing wages, SB 854, Labor Code Sections 1725.5, 1771, 1774, 1775, 1776, 1777.5, 1813, and 1815. Public Works Contractor Registration Programs, Electronic Certified Payroll Records submission to the State Labor Commissioner and other requirements, described at http://www.dir.ca.gov/Public-Works/Contractors.html.

Applicable projects are subject to compliance monitoring and enforcement by the California Department of Industrial Relations.

Copies of the general prevailing rates of per diem wages for each craft, classification, or type of worker needed to execute the Contract, as determined by Director of the State of California Department of Industrial Relations, are deemed included in the Contract Documents and shall be made available to any interested party on request.

Pursuant to Section 1861 of the Labor Code, Contractor represents that it is aware of the provisions of Section 3700 of the Labor Code which require every employer to be insured against liability for workers' compensation or to undertake self-insurance in accordance with the provisions of that Code, and Contractor shall comply with such provisions before commencing the performance of the Work of the Contract Documents.

Section 9.07 Licensing Laws. The Contractor and all subcontractors shall comply with the provisions of Chapter 9 Division 3 of the Business and Professions code concerning the licensing of contractors. All Contractors shall be licensed in accordance with the laws of the State of California and any Contractor not so licensed is subject to the penalties imposed by such laws. Prior to commencing any work under contract, all Contractors and subcontractors must show that they hold appropriate and current Contractor Licenses in the State of California. The Contractor shall provide such subcontractor information, including the class type, license, number, and expiration date to SMART.

Section 9.08 California Air Resources Board ("CARB") In-Use Off-Road Diesel-Fueled Fleets Certification of Compliance. Contractor shall comply, and shall ensure all subcontractors comply, with all applicable requirements of the most current version of the regulations imposed by California Air Resources Board ("CARB") including, without limitation, all applicable terms of Title 13, California Code of Regulations Division 3, Chapter 9 and all pending amendments ("Regulation"). Throughout this agreement, and for three (3) years thereafter, Contractor shall make available for inspection and copying any and all documents or information associated with Contractor's and its subcontractors' fleets

including, without limitation, the Certificates of Reported Compliance ("CRCs"), fuel/refueling records, maintenance records, emissions records, and any other information the Contractor is required to produce, keep, or maintain pursuant to the Regulation upon two (2) calendar days' notice from SMART. Contractor shall be solely liable for any and all costs associated with compliance with the Regulation as well as for any and all penalties, fines, damages, or costs associated with any and all violations, or failures to comply with the Regulation.

Section 9.09 Drug-Free Workplace. Contractor certifies that it will provide a drug-free workplace in compliance with Government Code §8350-§8357.

Section 9.10 Continuation of Work. Should any part, term or provision of this Agreement or any of the Contract Documents, or any document required herein or therein to be executed or delivered, be declared invalid, void or unenforceable, all remaining parts, terms and provisions shall remain in full force and effect and shall in no way be invalidated, impaired or affected thereby. If the provisions of any law causing such invalidity, illegality or unenforceability may be waived, they are hereby waived to the end that this Agreement and the Contract Documents may be deemed valid and binding agreements, enforceable in accordance with their terms to the greatest extent permitted by applicable law. In the event any provision not otherwise included in the Contract Documents is required to be included by any applicable law, that provision is deemed included herein by this reference (or, if such provision is required to be included in any particular portion of the Contract Documents, that provision is deemed included in that portion).

Section 9.11 Applicable Law and Forum. This Agreement shall be construed and interpreted according to the substantive law of California, regardless of the law of conflicts to the contrary in any jurisdiction. Venue for any action to enforce the terms of this Agreement or for the breach thereof shall be in the Superior Court of the State of California in the County of Marin.

Section 9.12 Claims Procedures. Contractor accepts the claims procedure established by Article 12 of Document 00 70 00 - General Conditions, as established under Section 930.2 of the California Government Code.

Section 9.13 Relationships of the Parties: No Intended Third-Party Beneficiaries. The Parties intend by this Agreement to establish a cooperative funding relationship, and do not intend to create a partnership, joint, venture, joint enterprise, or any other business relationship. There is no third person or entity who is an intended third-party beneficiary under this Agreement. No incidental beneficiary, whatever relationship such person may have with the Parties, shall have any right to bring an action or suit, or to assert any claim against the Parties under this Agreement. Nothing contained in this Agreement shall be construed to create and the Parties do not intend to create any rights in third parties.

Section 9.14 No Waiver of Breach. The waiver by SMART of any breach of any term or promise contained in this Agreement shall not be deemed to be a waiver of such term or provision or any subsequent breach of the same or any other term or promise

contained in this Agreement.

Section 9.15 Use of SMART Name and Logo Restrictions. Contractor is prohibited from using SMART's name and logo unless expressly authorized herein or by written authorization from SMART's legal counsel.

Section 9.16 Acceptance of Electronic Signatures and Counterparts. The parties agree that this Contract, Agreements ancillary to this Contract, and related documents to be entered into this Contract will be considered executed when all parties have signed this Agreement. Signatures delivered by scanned image as an attachment to electronic mail or delivered electronically through the use of programs such as DocuSign must be treated in all respects as having the same effect as an original signature. Each party further agrees that this Contract may be executed in two or more counterparts, all of which constitute one and the same instrument.

Section 9.17 Time of Essence. Time is and shall be of the essence of this Agreement and every provision hereof.

IN WITNESS WHEREOF, the parties hereto have executed this Agreement as of the Effective Date.

CONTRACTOR: RAILWORKS TRACK SYSTEMS, LLC

By: _____
Michael Rood, General Manager

Date: _____

SONOMA-MARIN AREA RAIL TRANSIT (SMART)

By: _____
Eddy Cumins, General Manager

Date: _____

CERTIFICATES OF INSURANCE ON FILE WITH AND APPROVED AS TO SUBSTANCE FOR SMART:

By: _____
Ken Hendricks, Procurement and Contracts Manager

Date: _____

APPROVED AS TO FORM FOR SMART:

By: _____
District Counsel

Date: _____

EXHIBIT A
SCHEDULE OF RATES

BASE PROJECT					
ITEM	ITEM DESCRIPTION	QTY	UNIT	UNIT COST	TOTAL ITEM PRICE
1	Bridge Repair MP B26.26 Novato Creek	1	LS	$57,246.00	$57,246.00
2	Bridge Repair MP B34.22 Sears Point	1	LS	$162,003.00	$162,003.00
3	Bridge Repair MP B37.76 Wingo (Base Work includes 2 Stringers)	1	LS	$239,820.00	$239,820.00
4	Bridge Repair MP B37.76 Wingo (Install additional 30 stringers)	1	LS	$145,166.00	$145,166.00

GENERAL INFORMATION

LS = Lump Sum
Costs are in United States Dollars

The above costs include all labor, supervision, equipment, materials, supplies, mobilization and demobilization costs, waste disposal, insurance, overhead, profit, and all other direct and indirect costs associated with performing the work included in this Agreement.

ITEM DESCRIPTIONS:

1. **Item 1: Bridge Repair MP B26.26 Novato Creek**

   All work and hardware to remove and replace six (6) each, new owner-supplied timber stringers.

2. **Item 2: Bridge Repair MP B34.22 Sears Point**

   All work and hardware to remove and replace thirty-six (36) each, new owner-supplied timber ties. Work includes removing existing bridge walkway and delivering metal grating walkway material to SMART yard for reuse.

3. **Item 3: Bridge Repair MP B37.76 Wingo (Base Work includes 2 Stringers)**

   All work and hardware to repair timber bents, replace two (2) each stringers, and repair timber sway bracing.

4. **Item 4: Bridge Repair MP B37.76 Wingo (Install additional 30 stringers)**

   All work and hardware to remove and replace additional thirty (30) each, owner-supplied timber stringers.

EXHIBIT B
STATE OF CALIFORNIA REQUIREMENTS

1. **General**.

In performance of its obligations pursuant to this Agreement [Hereinafter "Agreement"], the Contractor, Seller, Service Provider, or Consultant [Hereinafter "Contractor"] agrees to comply with all applicable provisions of the State of California and local law, regulations, and directives. The terms of the most recent amendment to any state or local laws, regulations, directives, and amendments to the grant or cooperative agreement providing funding for this Agreement that may be subsequently adopted, are applicable to the Agreement to the maximum extent feasible, unless the State of California provides otherwise in writing. The State regulations set forth in this Agreement to be observed in the performance of the Agreement are subject to change, and such changed requirements will apply to this Agreement as required. Contractor shall include in its subcontracts, and require its subcontractors of every tier to include in their respective subcontracts, provisions incorporating the requirements of this Attachment. Contractor's failure to comply with these requirements shall constitute a material breach of this Agreement and may result in the withholding of progress payments to the Contractor, in addition to other remedies.

It is the responsibility of the Contractor and its subcontractors to ensure that all clauses included in this Exhibit applicable to the work specified within the Agreement are adhered to by the Contractor and its subcontractors.

2. **Access To Records and Reports**.

Applicability: All Contracts

Contractor shall comply with the following requirements:

(a) Record Retention. Contractor will retain, and will require its subcontractors of all tiers to retain, complete and readily accessible records related in whole or in part to the contract, including, but not limited to, data, documents, reports, statistics, sub-Contracts, leases, subcontracts, arrangements, other third-party Contracts of any type, and supporting materials related to those records.

(b) Retention Period. The Contractor agrees to comply with the record retention requirements in accordance with 2 C.F.R. §200.333. The Contractor shall maintain all books, records, accounts and reports required under this Contract for a period of at not less than three (3) years after the date of termination or expiration of this Contract, except in the event of litigation or settlement of claims arising from the performance of this Contract, in which case records shall be maintained until the disposition of all such litigation, appeals, claims or exceptions related thereto.

(c) Access to Records. The Contractor agrees to provide access to SMART, the State of California, and its contractors to inspect and audit records and information related to performance of this contract as reasonably may be required. Contractor shall also permit SMART, the State of California, or their authorized representatives, to inspect all project work, materials, payrolls, and other data, and to audit the books, records, and accounts of Contractor and its subcontractors pertaining to the Agreement.

(d) Access to the Site of Performance. The Contractor agrees to permit the State of California and its contractors access to the sites of performance under this contract as reasonably may be required.

(e) State Audit, Inspection, Access to Records and Retention of Records Requirements. Contractor and its subcontractors shall establish and maintain an accounting system and records that properly accumulate and segregate incurred costs by line item for the project. Contractor and its subcontractors' accounting systems shall conform to generally accepted accounting principles (GAAP) and all records shall provide a breakdown of total costs charged to the project, including properly executed payrolls, time records, invoices and vouchers as well as all accounting generated reports. Contractor and its subcontractors shall permit representatives of the State and State Auditor to inspect, examine, make excerpts or transcribe Contractor and its subcontractors' work, documents, papers, materials, payrolls, books, records, accounts, any and all data relevant to this Agreement at any reasonable time and to audit and verify statements, invoices or bills submitted by Contractor and its subcontractors pursuant to this Agreement, and shall provide copies thereof upon request and shall provide such assistance as may be reasonably required in the course of such audit or inspection.

The State, its representatives and the State Auditor further reserve the right to examine, inspect, make copies, or excerpts of all work, documents, papers, materials, payrolls, books and accounts, and data pertaining to this Agreement and to inspect and re-examine said work, documents, papers, materials, payrolls, books, records, accounts and data during the life of the Agreement and for the three (3) year period following the final payment under this Agreement, and Contractor and its subcontractors shall in no event dispose of, destroy, alter or mutilate said work, documents, papers, materials, payrolls, books, records, accounts and data in any manner whatsoever for three (3) years after final payment under this Agreement and all pending matters are closed.

Any costs for which Contractors and its subcontractors have received payment that are determined by subsequent audit to be unallowable under the terms of this agreement may be required to be repaid to SMART by the Contractors and its subcontractors. Should Contractor and its subcontractors fail to reimburse money due SMART within 30 days of demand, or within such other period as may be agreed between the parties hereto, SMART is authorized to withhold future payments due Contractor and its subcontractors from any source.

The Contractor agrees that the Contract Cost Principles and Procedures at least as restrictive as 48 CFR, Federal Acquisition Regulations System, Chapter 1, Part 31 *et seq.*, shall be used to determine the allowability of individual items of costs.

The Contractor agrees to comply with Federal procedures in accordance with 49 CFR, Part 18, Uniform Administrative Requirements for Grants and Cooperative Agreements to State and Local Governments.

Any costs for which payments have been made to the Contractor, which are determined by subsequent audit to be unallowable under 48 CFR, Federal Acquisition Regulations System, Chapter 1, Part 31 *et seq.*, or 49 CFR, Part 18, Uniform Administrative Requirements for Grants and Cooperative Agreements to State and Local Governments, are subject to repayment by Contractor to SMART.

Any subcontract entered into as a result of this Agreement shall contain all the provisions of this section.

3. **ADA Access**

Applicability: All Construction, Architecture & Engineering, Operations Management, and Rolling Stock Contracts

The contractor agrees to comply with all applicable requirements of section 504 of the Rehabilitation Act of 1973, as amended, 29 U.S.C. § 794, which prohibits discrimination on the basis of handicaps, with the Americans with Disabilities Act of 1990 (ADA), as amended, 42U.S.C. §§ 12101 et seq., which requires that accessible facilities and services be made available to persons with disabilities, including any subsequent amendments to that Act, and with the Architectural Barriers act of 1968, as amended, 42 U.S.C. §§ 4151 et seq., which requires that buildings and public accommodations be accessible to persons with disabilities, including any subsequent amendments to that Act. In addition, the contractor agrees to comply with any and all applicable requirements issued by the State of California, DOT, DOJ, U.S. GSA, U.S. EEOC, U.S. FCC, any subsequent amendments thereto and any other nondiscrimination statute(s) that may apply to the Project or Services.

4. Civil Rights.

Applicability: All Contracts

The following Federal Civil Rights laws and regulations apply to the Agreement:

1. **Federal Equal Employment Opportunity (EEO) Requirements**. These include, but are not limited to:

   a) Nondiscrimination in Federal Public Transportation Programs. 49 U.S.C. § 5332, covering projects, programs, and activities financed under 49 U.S.C. Chapter 53,

prohibits discrimination on the basis of race, color, religion, national origin, sex (including sexual orientation and gender identity), disability, or age, and prohibits discrimination in employment or business opportunity.

b) Prohibition against Employment Discrimination. Title VII of the Civil Rights Act of 1964, as amended, 42 U.S.C. § 2000e, and Executive Order No. 11246, "Equal Employment Opportunity," September 24, 1965, as amended, prohibit discrimination in employment on the basis of race, color, religion, sex, or national origin.

2. **Nondiscrimination on the Basis of Sex**. Title IX of the Education Amendments of 1972, as amended, 20 U.S.C. § 1681 et seq. and implementing Federal regulations, "Nondiscrimination on the Basis of Sex in Education Programs or Activities Receiving Federal 8 Financial Assistance," 49 C.F.R. part 25 prohibit discrimination on the basis of sex.

3. **Nondiscrimination on the Basis of Age**. The "Age Discrimination Act of 1975," as amended, 42 U.S.C. § 6101 et seq., and Department of Health and Human Services implementing regulations, "Nondiscrimination on the Basis of Age in Programs or Activities Receiving Federal Financial Assistance," 45 C.F.R. part 90, prohibit discrimination by participants in federally assisted programs against individuals on the basis of age. The Age Discrimination in Employment Act (ADEA), 29 U.S.C. § 621 et seq., and Equal Employment Opportunity Commission (EEOC) implementing regulations, "Age Discrimination in Employment Act," 29 C.F.R. part 1625, also prohibit employment discrimination against individuals age 40 and over on the basis of age.

4. **Federal Protections for Individuals with Disabilities**. The Americans with Disabilities Act of 1990, as amended (ADA), 42 U.S.C. § 12101 et seq., prohibits discrimination against qualified individuals with disabilities in programs, activities, and services, and imposes specific requirements on public and private entities. Third party contractors must comply with their responsibilities under Titles I, II, III, IV, and V of the ADA in employment, public services, public accommodations, telecommunications, and other provisions, many of which are subject to regulations issued by other Federal agencies.

Civil Rights and Equal Opportunity

The Sonoma-Marin Area Rail Transit District is an Equal Opportunity Employer. As such, SMART agrees to comply with all applicable Federal civil rights laws and implementing regulations. Apart from inconsistent requirements imposed by Federal laws or regulations, SMART agrees to comply with the requirements of 49 U.S.C. § 5323(h) (3) by not using any Federal assistance to support procurements using exclusionary or discriminatory specifications. Under this Contract, the Contractor shall at all times comply with the following requirements and shall include these requirements in each subcontract entered into as part thereof.

1. **Nondiscrimination**. In accordance with Federal transit law at 49 U.S.C. § 5332, the Contractor agrees that it will not discriminate against any employee or applicant for employment because of race, color, religion, national origin, sex, disability, or age.

2. **Race, Color, Religion, National Origin, Sex**. In accordance with Title VII of the Civil Rights Act, as amended, 42 U.S.C. § 2000e et seq., and Federal transit laws at 49 U.S.C. § 5332, the Contractor agrees to comply with all applicable equal employment opportunity requirements of U.S. Department of Labor (U.S. DOL) regulations, "Office of Federal Contract Compliance Programs, Equal Employment Opportunity, Department of Labor," 41 C.F.R. chapter 60, and Executive Order No. 11246, "Equal Employment Opportunity in Federal Employment," September 24, 1965, 42 U.S.C. § 2000e note, as amended by any later Executive Order that amends or supersedes it, referenced in 42 U.S.C. § 2000e note. The Contractor agrees to take affirmative action to ensure that applicants are employed, and that employees are treated during employment, without regard to their race, color, religion, national origin, or sex (including sexual orientation and gender identity). Such action shall include, but not be limited to, the following: employment, promotion, demotion or transfer, recruitment or recruitment advertising, layoff or termination; rates of pay or other forms of compensation; and selection for training, including apprenticeship.

3. **Age.** In accordance with the Age Discrimination in Employment Act, 29 U.S.C. §§ 621- 634, U.S. Equal Employment Opportunity Commission (U.S. EEOC) regulations, "Age Discrimination in Employment Act," 29 C.F.R. part 1625, the Age Discrimination Act of 1975, as amended, 42 U.S.C. § 6101 et seq., U.S. Health and Human Services regulations, "Nondiscrimination on the Basis of Age in Programs or Activities Receiving Federal Financial Assistance," 45 C.F.R. part 90, and Federal transit law at 49 U.S.C. § 5332, the Contractor agrees to refrain from discrimination against present and prospective employees for reason of age.

4. **Disabilities**. In accordance with section 504 of the Rehabilitation Act of 1973, as amended, 29 U.S.C. § 794, the Americans with Disabilities Act of 1990, as amended, 42 U.S.C. § 12101 et seq., the Architectural Barriers Act of 1968, as amended, 42 U.S.C. § 4151 et seq., and Federal transit law at 49 U.S.C. § 5332, the Contractor agrees that it will not discriminate against individuals on the basis of disability.

5. **Promoting Free Speech and Religious Liberty**. The Contractor shall ensure that Federal funding is expended in full accordance with the U.S. Constitution, Federal Law, and statutory and public policy requirements: including, but not limited to, those protecting free speech, religious liberty, public welfare, the environment, and prohibiting discrimination.

The Contractor also agrees to include these requirements in each subcontract.

5. Clean Water Act

Applicability: All Contracts > $150,000

The Contractor agrees to comply with all applicable standards, orders, or regulations issued pursuant to the Clean Air Act (42 U.S.C. § 7401-7671q) and the Federal Water Pollution Control Act as amended (33 U.S.C. § 1251-1387). Violations must be reported to SMART and the Regional Office of the Environmental Protection Agency. The following applies for contracts of amounts in excess of $150,000:

Clean Air Act

a. The contractor agrees to comply with all applicable standards, orders or regulations issued pursuant to the Clean Air Act, as amended, 42 U.S.C. § 7401 et seq.

b. The contractor agrees to report each violation to SMART and understands and agrees that SMART will, in turn, report each violation as required to assure notification to the Agency, Federal Emergency Management Agency, and the appropriate Environmental Protection Agency Regional Office.

c. The contractor agrees to include these requirements in each subcontract exceeding $150,000.

Federal Water Pollution Control Act

(1) The contractor agrees to comply with all applicable standards, orders or regulations issued pursuant to the Federal Water Pollution Control Act, as amended, 33 U.S.C. 1251 et seq.

(2) The contractor agrees to report each violation to SMART and understands and agrees that SMART will, in turn, report each violation as required to assure notification to the Agency, Federal Emergency Management Agency, and the appropriate Environmental Protection Agency Regional Office.

(3) The contractor agrees to include these requirements in each subcontract exceeding $150,000.

6. **Contract Work Hours and Safety Standards Act**.

Applicability: All Operations Management, Service Agreements, Rolling Stock Purchases, and Construction Contracts >$100,000.

a. Where applicable (see 40 U.S.C. § 3701 et seq), all contracts awarded by the non-Federal entity in excess of $100,000 that involve the employment of mechanics or

laborers must include a provision for compliance with 40 U.S.C. §§ 3702 and 3704, as supplemented by Department of Labor regulations at 29 C.F.R. Part 5. See 2 C.F.R. Part 200, Appendix II.

b. Under 40 U.S.C. § 3702, each contractor must be required to compute the wages of every mechanic and laborer on the basis of a standard work week of 40 hours. Work in excess of the standard work week is permissible provided that the worker is compensated at a rate of not less than one and a half times the basic rate of pay for all hours worked in excess of 40 hours in the work week.

c. The requirements of 40 U.S.C. § 3704 are applicable to construction work and provide that no laborer or mechanic must be required to work in surroundings or under working conditions which are unsanitary, hazardous or dangerous. These requirements do not apply to the purchases of supplies or materials or articles ordinarily available on the open market, or contracts for transportation or transmission of intelligence.

Compliance with the Contract Work Hours and Safety Standards Act.

(1) Overtime requirements - No contractor or subcontractor contracting for any part of the contract work which may require or involve the employment of laborers or mechanics shall require or permit any such laborer or mechanic in any workweek in which he or she is employed on such work to work in excess of forty (40) hours in such workweek unless such laborer or mechanic receives compensation at a rate not less than one and one-half (1.5) times the basic rate of pay for all hours worked in excess of forty (40) hours in such workweek.

(2) Violation; liability for unpaid wages; liquidated damages - In the event of any violation of the clause set forth in paragraph (1) of this section the contractor and any subcontractor responsible therefor shall be liable for the unpaid wages. In addition, such contractor and subcontractor shall be liable to the United States (in the case of work done under contract for the District of Columbia or a territory, to such District or to such territory), for liquidated damages. Such liquidated damages shall be computed with respect to each individual laborer or mechanic, including watchmen and guards, employed in violation of the clause set forth in paragraph (1) of this section, in the sum of $10 for each calendar day on which such individual was required or permitted to work in excess of the standard workweek of forty (40) hours without payment of the overtime wages required by the clause set forth in paragraph (1) of this section.

(3) Withholding for unpaid wages and liquidated damages. SMART shall upon its own action or upon written request of an authorized representative of the Department of Labor withhold or cause to be withheld, from any moneys payable on account of work performed by the contractor or subcontractor under any such contract or any other Federal contract with the same prime contractor, or any other federally-assisted contract subject to the Contract Work Hours and Safety Standards Act, which is held

by the same prime contractor, such sums as may be determined to be necessary to satisfy any liabilities of such contractor or subcontractor for unpaid wages and liquidated damages as provided in the clause set forth in paragraph (2) of this section.

(4) Subcontracts. The contractor or subcontractor shall insert in any subcontracts the clauses set forth in paragraph (1) through (4) of this section and also a clause requiring the subcontractors to include these clauses in any lower tier subcontracts. The prime contractor shall be responsible for compliance by any subcontractor or lower tier subcontractor with the clauses set forth in paragraphs (1) through (4) of this section."

7. **Davis Bacon Act and Copeland Anti-Kickback Act**

Applicability: All Construction Contracts > $2,000

For all prime construction, alteration or repair contracts in excess of $2,000 awarded by FTA, the Contractor shall comply with the Davis-Bacon Act and the Copeland "Anti-Kickback" Act. Under 49 U.S.C. § 5333(a), prevailing wage protections apply to laborers and mechanics employed on FTA assisted construction, alteration, or repair projects. The Contractor will comply with the Davis-Bacon Act, 40 U.S.C. §§ 3141-3144, and 3146-3148 as supplemented by DOL regulations at 29 C.F.R. part 5, "Labor Standards Provisions Applicable to Contracts Governing Federally Financed and Assisted Construction." In accordance with the statute, the Contractor shall pay wages to laborers and mechanics at a rate not less than the prevailing wages specified in a wage determination made by the Secretary of Labor. In addition, the Contractor agrees to pay wages not less than once a week. The Contractor shall also comply with the Copeland "Anti-Kickback" Act (40 U.S.C. § 3145), as supplemented by DOL regulations at 29 C.F.R. part 3, "Contractors and Subcontractors on Public Building or Public Work Financed in Whole or in part by Loans or Grants from the United States." The Contractor is prohibited from inducing, by any means, any person employed in the construction, completion, or repair of public work, to give up any part of the compensation to which he or she is otherwise entitled.

8. **Debarment and Suspension**

Applicability: All Contracts > $25,000

The Contractor shall comply and facilitate compliance with U.S. DOT regulations, "Nonprocurement Suspension and Debarment," 2 C.F.R. part 1200, which adopts and supplements the U.S. Office of Management and Budget (U.S. OMB) "Guidelines to Agencies on Governmentwide Debarment and Suspension (Nonprocurement)," 2 C.F.R. part 180. These provisions apply to each contract at any tier of $25,000 or more, and to each contract at any tier for a federally required audit (irrespective of the contract amount). As such, the Contractor shall verify that its principals, affiliates, and subcontractors are eligible to participate in this federally funded contract and are not presently declared by any Federal department or agency to be:

i. Debarred from participation in any federally assisted Award;
ii. Suspended from participation in any federally assisted Award;
iii. Proposed for debarment from participation in any federally assisted Award;
iv. Declared ineligible to participate in any federally assisted Award;
v. Voluntarily excluded from participation in any federally assisted Award; or
vi. Disqualified from participation in ay federally assisted Award.

By signing and submitting its bid or proposal, the bidder or proposer certifies as follows:

The certification in this clause is a material representation of fact relied upon by SMART. If it is later determined by SMART that the bidder or proposer knowingly rendered an erroneous certification, in addition to remedies available to SMART, the Federal Government may pursue available remedies, including but not limited to suspension and/or debarment. The bidder or proposer agrees to comply with the requirements of 2 C.F.R. part 180, subpart C, as supplemented by 2 C.F.R. part 1200, while this offer is valid and throughout the period of any contract that may arise from this offer. The bidder or proposer further agrees to include a provision requiring such compliance in its lower tier covered transactions.

9. Prohibition on Certain Telecommunications and Video Surveillance Services or Equipment.

Applicability: All Contracts

a) SMART, Contractors, and Subcontractors are prohibited from obligating or expending loan or grant funds to:

1) Procure or obtain;
2) Extend or renew a contract to procure or obtain; or
3) Enter into a contract (or extend or renew a contract) to procure or obtain equipment, services, or systems that uses covered telecommunications equipment or services as a substantial or essential component of any system, or as critical technology as part of any system. As described in Public Law 115-232, section 889, covered telecommunications equipment is telecommunications equipment produced by Huawei Technologies Company or ZTE Corporation (or any subsidiary or affiliate of such entities).

(ii) For the purpose of public safety, security of government facilities, physical security surveillance of critical infrastructure, and other national security purposes, video surveillance and telecommunications equipment produced by Hytera Communications Corporation, Hangzhou Hikvision Digital Technology Company, or Dahua Technology Company (or any subsidiary or affiliate of such entities).
(iii) Telecommunications or video surveillance services provided by such entities or using such equipment.
(iv) Telecommunications or video surveillance equipment or services produced

or provided by an entity that the Secretary of Defense, in consultation with the Director of the National Intelligence or the Director of the Federal Bureau of Investigation, reasonably believes to be an entity owned or controlled by, or otherwise connected to, the government of a covered foreign country.

b) In implementing the prohibition under Public Law 115-232, section 889, subsection (f), paragraph (1), heads of executive agencies administering loan, grant, or subsidy programs shall prioritize available funding and technical support to assist affected businesses, institutions and organizations as is reasonably necessary for those affected entities to transition from covered communications equipment and services, to procure replacement equipment and services, and to ensure that communications service to users and customers is sustained.

c) See Public Law 115-232, section 889 for additional information.
d) See also § 200.471.

10. **Restrictions on Lobbying**

Applicability: All Contracts > $100,000

Conditions on use of funds.

(a) No appropriated funds may be expended by the recipient of a Federal contract, grant, loan, or cooperative agreement to pay any person for influencing or attempting to influence an officer or employee of any agency, a Member of Congress, an officer or employee of Congress, or an employee of a Member of Congress in connection with any of the following covered Federal actions: the awarding of any Federal contract, the making of any Federal grant, the making of any Federal loan, the entering into of any cooperative agreement, and the extension, continuation, renewal, amendment, or modification of any Federal contract, grant, loan, or cooperative agreement.

(b) Each person who requests or receives from an agency a Federal contract, grant, loan, or cooperative agreement shall file with that agency a certification, that the person has not made, and will not make, any payment prohibited by paragraph (a) of this section.

(c) Each person who requests or receives from an agency a Federal contract, grant, loan, or a cooperative agreement shall file with that agency a disclosure form if such person has made or has agreed to make any payment using nonappropriated funds (to include profits from any covered Federal action), which would be prohibited under paragraph (a) of this section if paid for with appropriated funds.

(d) Each person who requests or receives from an agency a commitment providing for the United States to insure or guarantee a loan shall file with that agency a statement, whether that person has made or has agreed to make any payment to influence or attempt to influence an officer or employee of any agency, a Member of Congress, an

officer or employee of Congress, or an employee of a Member of Congress in connection with that loan insurance or guarantee.

(e) Each person who requests or receives from an agency a commitment providing for the United States to insure or guarantee a loan shall file with that agency a disclosure form if that person has made or has agreed to make any payment to influence or attempt to influence an officer or employee of any agency, a Member of Congress, an officer or employee of Congress, or an employee of a Member of Congress in connection with that loan insurance or guarantee.

Certification and disclosure.

(a) Each person shall file a certification, and a disclosure form, if required, with each submission that initiates agency consideration of such person for:

(1) Award of a Federal contract, grant, or cooperative agreement exceeding $100,000; or
(2) An award of a Federal loan or a commitment providing for the United States to insure or guarantee a loan exceeding $150,000.

(b) Each person shall file a certification, and a disclosure form, if required, upon receipt by such person of:

(1) A Federal contract, grant, or cooperative agreement exceeding $100,000; or
(2) A Federal loan or a commitment providing for the United States to insure or guarantee a loan exceeding $150,000, Unless such person previously filed a certification, and a disclosure form, if required, under paragraph (a) of this section.

(c) Each person shall file a disclosure form at the end of each calendar quarter in which there occurs any event that requires disclosure or that materially affects the accuracy of the information contained in any disclosure form previously filed by such person under paragraphs (a) or (b) of this section. An event that materially affects the accuracy of the information reported includes:

(1) A cumulative increase of $25,000 or more in the amount paid or expected to be paid for influencing or attempting to influence a covered Federal action; or
(2) A change in the person(s) or individual(s) influencing or attempting to influence a covered Federal action; or,
(3) A change in the officer(s), employee(s), or Member(s) contacted to influence or attempt to influence a covered Federal action.

(d) Any person who requests or receives from a person referred to in paragraphs (a) or (b) of this section:

(1) A subcontract exceeding $100,000 at any tier under a Federal contract;
(2) A subgrant, contract, or subcontract exceeding $100,000 at any tier under a Federal

grant;

(3) A contract or subcontract exceeding $100,000 at any tier under a Federal loan exceeding $150,000; or,

(4) A contract or subcontract exceeding $100,000 at any tier under a Federal cooperative agreement, Shall file a certification, and a disclosure form, if required, to the next tier above.

(e) All disclosure forms, but not certifications, shall be forwarded from tier to tier until received by the person referred to in paragraphs (a) or (b) of this section. That person shall forward all disclosure forms to the agency.

(f) Any certification or disclosure form filed under paragraph (e) of this section shall be treated as a material representation of fact upon which all receiving tiers shall rely. All liability arising from an erroneous representation shall be borne solely by the tier filing that representation and shall not be shared by any tier to which the erroneous representation is forwarded. Submitting an erroneous certification or disclosure constitutes a failure to file the required certification or disclosure, respectively. If a person fails to file a required certification or disclosure, the United States may pursue all available remedies, including those authorized by section 1352, title 31, U.S. Code.

(g) For awards and commitments in process prior to December 23, 1989, but not made before that date, certifications shall be required at award or commitment, covering activities occurring between December 23, 1989, and the date of award or commitment. However, for awards and commitments in process prior to the December 23, 1989 effective date of these provisions, but not made before December 23, 1989, disclosure forms shall not be required at time of award or commitment but shall be filed within 30 days.

(h) No reporting is required for an activity paid for with appropriated funds if that activity is allowable under either subpart B or C.

11. **Safe Operation of Motor Vehicles.**

Applicability: All Contracts

Seat Belt Use

The Contractor is encouraged to adopt and promote on-the-job seat belt use policies and programs for its employees and other personnel that operate company-owned vehicles, company rented vehicles, or personally operated vehicles. The terms “company-owned” and “company-leased” refer to vehicles owned or leased either by the Contractor or SMART.

Distracted Driving

The Contractor agrees to adopt and enforce workplace safety policies to decrease crashes caused by distracted drivers, including policies to ban text messaging while using an electronic device supplied by an employer, and driving a vehicle the driver owns or rents,

a vehicle Contactor owns, leases, or rents, or a privately-owned vehicle when on official business in connection with the work performed under this Contract.

12. **Procurement of Recovered Materials**

Applicability: All Contracts > $10,000

The Contractor agrees to comply with all the requirements of Section 6002 of the Solid Waste Disposal Act, as amended by the Resource Conservation and Recovery Act (RCRA), as amended (42 U.S.C. 6962), including but not limited to the regulatory provisions of 40 CFR Part 247, and Executive Order 12873, as they apply to the procurement of the items designated in Subpart B of 40 CFR Part 247. The Contractor agrees to comply with the U.S. Environmental Protection Agency (US EPA), "Comprehensive Procurement Guideline for Products Containing Recovered Materials", 40 CFR Part 247.

13. **Special DOL EEO Clause**

Applicability: All Construction Contracts > $10,000

The contractor and subcontractor shall abide by the requirements of 41 CFR 60-1.4(a), 60-300.5(a) and 60- 741.5(a). These regulations prohibit discrimination against qualified individuals based on their status as protected veterans or individuals with disabilities and prohibit discrimination against all individuals based on their race, color, religion, sex, sexual orientation, gender identity or national origin. Moreover, these regulations require that covered prime contractors and subcontractors take affirmative action to employ and advance in employment individuals without regard to race, color, religion, sex, sexual orientation, gender identity, national origin, disability or veteran status.

14. Termination.

Applicability: All Contracts > $10,000

In addition to the Termination provisions contained in the Agreement, the following Termination provisions apply.

(a) Termination for Convenience. SMART may terminate this Agreement, in whole or in part, at any time by written notice to the Contractor when it is in SMART's best interest. The Contractor shall be paid its costs, including Agreement close-out costs, and profit on work performed up to the time of termination. The Contractor shall promptly submit its termination claim to SMART to be paid the Contractor. If the Contractor has any property in its possession belonging to SMART, the Contractor will account for the same, and dispose of it in the manner SMART directs.

(b) Termination for Default [Breach or Cause]. If the Contractor does not deliver supplies in accordance with the Agreement delivery schedule, or, if the Agreement is for

services, the Contractor fails to perform in the manner called for in the contract, or if the Contractor fails to comply with any other provisions of the contract, SMART may terminate this Agreement for default. Termination shall be effected by serving a Notice of Termination on the Contractor setting forth the manner in which the Contractor is in default. The Contractor will only be paid the Contract price for supplies delivered and accepted, or services performed in accordance with the manner of performance set forth in the contract. If it is later determined by SMART that the Contractor had an excusable reason for not performing, such as a strike, fire, or flood, events which are not the fault of or are beyond the control of the Contractor, then SMART, after setting up a new delivery of performance schedule, may allow the Contractor to continue work, or treat the termination as a Termination for Convenience.

(c) Opportunity to Cure. SMART in its sole discretion may, in the case of a termination for breach or default, allow the Contractor up to ten (10) calendar days in which to cure the defect. In such case, the notice of termination will state the time period in which cure is permitted and other appropriate conditions.

If Contractor fails to remedy to SMART's satisfaction the breach or default of any of the terms, covenants, or conditions of this Agreement within ten (10) calendar days after receipt by Contractor of written notice from SMART setting forth the nature of said breach or default, SMART shall have the right to terminate the Agreement without any further obligation to Contractor. Any such termination for default shall not in any way operate to preclude SMART from also pursuing all available remedies against Contractor and its sureties for said breach or default.

(d) Waiver of Remedies for any Breach. In the event that SMART elects to waive its remedies for any breach by Contractor of any covenant, term or condition of this Agreement, such waiver by SMART shall not limit SMART's remedies for any succeeding breach of that or of any other term, covenant, or condition of this Agreement.

(e) Termination for Convenience (Professional or Transit Service Contracts) SMART, by written notice, may terminate this contract, in whole or in part, when it is in SMART's best interest. If this contract is terminated, SMART shall be liable only for payment under the payment provisions of this contract for services rendered before the effective date of termination.

(f) Termination for Default (Construction) If the Contractor refuses or fails to prosecute the work or any separable part, with the diligence that will ensure its completion within the time specified in this contract or any extension or fails to complete the work within this time, or if the Contractor fails to comply with any other provision of this contract, SMART may terminate this contract for default. SMART shall terminate by delivering to the Contractor a Notice of Termination specifying the nature of the default. In this event, SMART may take over the work and compete it by contract or otherwise, and may take possession of and use any materials, appliances, and plant on the work site necessary for completing the work. The Contractor and its sureties shall be liable for any damage to SMART resulting from the Contractor's refusal or failure to complete the work within

specified time, whether or not the Contractor's right to proceed with the work is terminated. This liability includes any increased costs incurred by SMART in completing the work.

The Contractor's right to proceed shall not be terminated nor shall the Contractor be charged with damages under this clause if:

1. The delay in completing the work arises from unforeseeable causes beyond the control and without the fault or negligence of the Contractor. Examples of such causes include: acts of God, acts of another contractor in the performance of a contract with SMART, epidemics, quarantine restrictions, strikes, freight embargoes; and
2. The Contractor, within [10] days from the beginning of any delay, notifies SMART in writing of the causes of delay. If, in the judgment of SMART, the delay is excusable, the time for completing the work shall be extended. The judgment of SMART shall be final and conclusive for the parties, but subject to appeal under the Disputes clause(s) of this contract.
3. If, after termination of the Contractor's right to proceed, it is determined that the Contractor was not in default, or that the delay was excusable, the rights and obligations of the parties will be the same as if the termination had been issued for the convenience of SMART.

If the termination is for the convenience of SMART, the Contractor shall be paid its contract close-out costs, and a fee, if the contract provided for payment of a fee, in proportion to the work performed up to the time of termination.

If, after serving a Notice of Termination for Default, SMART determines that the Contractor has an excusable reason for not performing, SMART, after setting up a new work schedule, may allow the Contractor to continue work, or treat the termination as a Termination for Convenience.

15. Violation and Breach of Contract.

Applicability: All Contracts

<u>Rights and Remedies of SMART</u>

The duties and obligations imposed by the Agreement and the rights and remedies available thereunder shall be in addition to and not a limitation of any duties, obligations, rights and remedies otherwise imposed or available by law. No action or failure to act by SMART or Contractor shall constitute a waiver of any right or duty afforded any of them under the Contract, nor shall any such action or failure to act constitute an approval of or acquiescence in any breach thereunder, except as may be specifically agreed in writing.

Rights and Remedies of Contractor
Inasmuch as the Contractor can be adequately compensated by money damages for any breach of this Contract, which may be committed by SMART, the Contractor expressly agrees that no default, act or omission of SMART shall constitute a material breach of this Contract, entitling Contractor to cancel or rescind the Contract (unless SMART directs Contractor to do so) or to suspend or abandon performance.

Remedies
Unless this Agreement provides otherwise, all claims, counterclaims, disputes and other matters in question between SMART and the Contractor arising out of or relating to this Agreement or its breach will be decided by arbitration if the parties mutually agree, or in a court of competent jurisdiction within California.

Disputes
Disputes arising in the performance of this Agreement which are not resolved by agreement of the parties shall be decided in writing by SMART's General Manager. This decision shall be final and conclusive unless within ten (10) days from the date of receipt of its copy, the Contractor mails or otherwise furnishes a written appeal to the General Manager. In connection with any such appeal, the Contractor shall be afforded an opportunity to be heard and to offer evidence in support of its position. The decision of the General Manager shall be binding upon the Contractor and the Contractor shall abide by the decision.

Performance during Dispute
Unless otherwise directed by SMART, Contractor shall continue performance under this Contract while matters in dispute are being resolved.

Claims for Damages
Should either party to the Contract suffer injury or damage to person or property because of any act or omission of the party or of any of its employees, agents or others for whose acts it is legally liable, a claim for damages therefor shall be made in writing to such other party within a reasonable time after the first observance of such injury or damage.

16. **Conformance with National ITS Architecture**

Applicability: All ITS Contracts

Intelligent Transportation Systems (ITS) projects shall conform to the National ITS Architecture and standards pursuant to 23 CFR § 940. Conformance with the National ITS Architecture is interpreted to mean the use of the National ITS Architecture to develop a regional ITS architecture in support of integration and the subsequent adherence of all ITS projects to that regional ITS architecture. Development of the regional ITS architecture should be consistent with the transportation planning process for Statewide and Metropolitan Transportation Planning (49 CFR Part 613 and 621).

17. **Severability**

Applicability: All Contracts

The Contractor agrees that if any provision of this Agreement or any amendment thereto is determined to be invalid, then the remaining provisions thereof that conform to State of California laws, regulations, requirements, and guidance will continue in effect.

18. **Trafficking in Persons**

Applicability: All Contracts

The contractor agrees that it and its employees that participate in this contract, may not:

(a) Engage in severe forms of trafficking in persons during the period of time that the contract is in effect;
(b) Procure a commercial sex act during the period of time that the contract is in effect; or
(c) Use forced labor in the performance of the contract or subagreements thereunder.

19. **Rights to Inventions Made Under a Contract or Agreement.**

Applicability: All Research and Development Contracts

Contractor agrees to comply with the requirements of 37 C.F.R. §401.2(a), "Rights to Inventions Made by Nonprofit Organizations and Small Business Firms under Government Grants, Contracts and Cooperative Agreements" and any implementing regulations issued by SMART.

20. **Domestic Preferences for Procurements**

Applicability: All Contracts

Contractor shall make every effort to provide a preference for the purchase, acquisition, or use of goods, products, or materials produced in the United States (including but not limited to iron, aluminum, steel, cement, and other manufactured products). This section must be included in all subcontracts.

For the purposes of this section:

1) "Produced in the United States" means, for iron and steel products, that all manufacturing processes, from the initial melting stage through the application of coatings, occurred in the United States.

2) "Manufactured products" means items and construction materials composed in whole

or in part of non-ferrous metals such as aluminum; plastics and polymer-based products such as polyvinyl chloride pipe; aggregates such as concrete; glass, including optical fiber; and lumber.

21. **Whistleblower Protections**

Applicability: All Contracts

An employee of the Contractor or Subcontractor must not be discharged, demoted, or otherwise discriminated against as a reprisal for disclosing to a person or body described in paragraph (a)(2) of 41 U.S.C. 4712 information that the employee reasonably believes is evidence of gross mismanagement of a Federal contract or grant, a gross waste of Federal funds, an abuse of authority relating to a Federal contract or grant, a substantial and specific danger to public health or safety, or a violation of law, rule, or regulation related to a Federal contract (including the competition for or negotiation of a contract) or grant. The Contractor and their subcontractors must inform their employees in writing of employee whistleblower rights and protections under 41 U.S.C. 4712. See statutory requirements for whistleblower protections at 10 U.S.C. 4701, 41 U.S.C. 4712, 41 U.S.C. 4304, and 10 U.S.C. 4310.

INVITATION FOR BID

FOR

BRAZOS RAILROAD TIMBER BRIDGE REPAIRS – PHASE II

SOLICITATION NO. FR-BB-25-001

Sonoma-Marin Area Rail Transit District (SMART)
5401 Old Redwood Hwy., Ste. 200
Petaluma, CA 94954

Issue Date: May 27, 2025

Deadline for Bids: July 1, 2025 at 2:00pm (Pacific)

Table of Contents

1. NOTICE INVITING BIDS 4
   1.1 Overview 4
   1.2 Completion Timeline 8
   1.3 Minimum Requirements 9
   1.4 Prevailing Wage Requirements 9
   1.5 Department of Industrial Relations ("DIR") Registration 10
   1.6 California Air Resources Board ("CARB") Requirements 10
   1.7 Bid Guaranty 10
   1.8 Contract Bonds 11
   1.9 Retention 12
   1.10 Insurance Requirements 12
   1.11 Equal Employment Opportunity 12
   1.12 Procurement Schedule 13
   1.13 Pre-Bid Meeting Information 13
   1.14 Public Bid Opening Information 13
   1.15 Bidder Questions and Clarification Requests 14
   1.16 Brand or Approved Equal Substitutions 15
   1.17 Addenda 16
2. INSTRUCTIONS TO BIDDERS 16
   2.1 Bid Submission Process 16
      PART A. BID FORM 17
      PART B. QUESTIONNAIRE & FINANCIAL STATEMENT 17
      PART C. REQUIRED CERTIFICATES AND FORMS 17
   2.2 Conditions of Bid 17
   2.3 Modifications to a Bid prior to Due Date 17
   2.4 Cost of Bidding 17
   2.5 Bid Irregularities and Discrepancies 18
   2.6 Multiple Bids 18
   2.7 Relief of Bidders 18
   2.8 General Bid Information 18
   2.9 Warranty of Title 19
   2.10 Warranty of Fitness 19
   2.11 Non-Collusion Certification 19
3. BID EVALUATION 19
   3.1 Responsiveness Evaluation 19
   3.2 Responsibility Evaluation 20
   3.3 Single Bid Response 21
4. AWARD 21
   4.1 No Obligation to Award 21
   4.2 Award 21
   4.3 Execution of Contract 21

4.4 Failure to Execute Contract 21
4.5 Notice to Proceed 22
4.6 Release of Information 22
5. PROTEST PROCEDURES 22
6. LEGAL, CONTRACTUAL, AND FINANCIAL INFORMATION 22
6.1 Bid and Accompanying Documents 22
6.2 Conflict of Interest 23
6.3 Economic Sanctions 23
6.4 Confidentiality 23
6.5 Public Disclosure 24
7. EXISTING SITE CONDITIONS 24
7.1 General Information 24
7.2 Reports and Information 25
7.3 Use of Information on Existing Conditions 25
7.4 Limited Reliance Permitted on Certain Information 26
7.5 Investigations 27
8. DISTRICT'S RESERVATION OF RIGHTS 27

The following Attachments and Forms are incorporated into this Invitation for Bid:

ATTACHMENTS

Attachment A: Document 00 52 00 - Agreement for Contractor Services
Attachment B: Document 00 70 00 – General Conditions
Attachment C: General Requirements
Attachment D: Technical Plans and Specifications
Attachment E: Bid Forms

- FORM BF: Bid Form
- FORM QF: Questionnaire and Financial Statement
- FORM BB: Bidder's Bond
- Document 00 63 25: Substitution Request
- Document 00 61 13.16: Payment Bond
- Document 00 61 13.13: Performance Bond
- FORM EA: Escrow Agreement for Security Deposits in Lieu of Retention

1. NOTICE INVITING BIDS

Pursuant to Public Contracts Code Section 22000, the Sonoma-Marin Area Rail Transit District (hereinafter "SMART" or "District") has elected to participate in the Uniform Construction Cost Accounting sealed Bidding procedures process.

NOTICE IS HEREBY GIVEN that SMART will receive sealed bids for the following project:

BRAZOS RAILROAD TIMBER BRIDGE REPAIRS – PHASE II
Solicitation No. FR-BB-25-001

The Sealed Bids are subject to the terms, conditions, specifications, and provisions, set forth herein.

Bid Documents will be made available on SMART's Procurement Portal located at https://sonomamarintrain.bonfirehub.com and can be downloaded at no cost.

1.1 Overview

A. Background

The Sonoma-Marin Area Rail Transit District (SMART) is a Special District within the State of California that owns, maintains, and operates passenger rail service in Sonoma County and Marin County. In addition to passenger rail service, SMART is a common carrier that owns and operates freight rail services within Sonoma County, Marin County, and Napa County.

B. Project

1. Overview

SMART is seeking Sealed Bids from licensed, qualified, and experienced contractors to repair three (3) railroad timber bridges on the Brazos junction (SMART's Freight Line).

Scope of work includes posting or repair of piles, repair or replacement of stringers, reconstruction of frame bents, walkway removal, replacement of bolts, replacement of chords, and debris removal and disposal. The Metal walkway grating shall be delivered to the SMART Schellville Yard.

Contractor shall repair timber bridges listed per the plans and specifications as listed below and per Attachment D – Technical Specifications and Plans.

The general scope of work per bridge is as follows:

a. MP B26.26 Novato Creek: Replace timber stringers.

b. MP B34.22 Sears Point Creek: Remove walkway, replace timber ties.

c. MP B37.76 Wingo Bridge (Sonoma Creek): Replace timber stringers, Frame timber bents.

d. Additive Alternate MP B37.76 Wingo Bridge (Sonoma Creek): Replace additional 30 timber stringers.

All work performed and materials furnished shall comply with AREMA Standards and Specifications.

Reference material specifications in Attachment D- Technical Specifications and Plans.

Owner Furnished Materials

Contractor will use District furnished material, which is stored at the SMART Schellville Freight Yard located at the intersection of Highway 12/121 and 8th Street near the town of Sonoma (1480 Highway 121, Sonoma CA 95476.

Below is the list and quantity of Owner-Furnished Materials:

Material	Quantity
17.5” x 8” x 31’	7
17.5” x 8 x 30'	3
16.5” x 8” x 30’	33
7.5” x 4” x 18’	13

Contractor is responsible for transporting material to the work sites and confirming quantities and dimensions.

Note: Bidders shall confirm all Owner-Furnished material during the bidding process using the bidder question and answer process identified in Section 1.15 “Bidder Questions and Clarification

Requests". If Bidder's note any discrepancy in the specifications or materials, they shall submit a question or clarification using this process so that SMART can review and correct as needed.

2. Work Location

This work will occur at three existing bridge locations along the SMART Brazos Junction. The work location generally begins North of the Highway 37 crossing and South of the Highway 12/121 crossing in Sonoma County, California.

The bridges are located at Brazos Junction MP B26.26 Novato Creek, MP B34.22 (Sears Point Bridge) and MP B37.76 (Sonoma Creek aka Wingo Bridge). See below map:

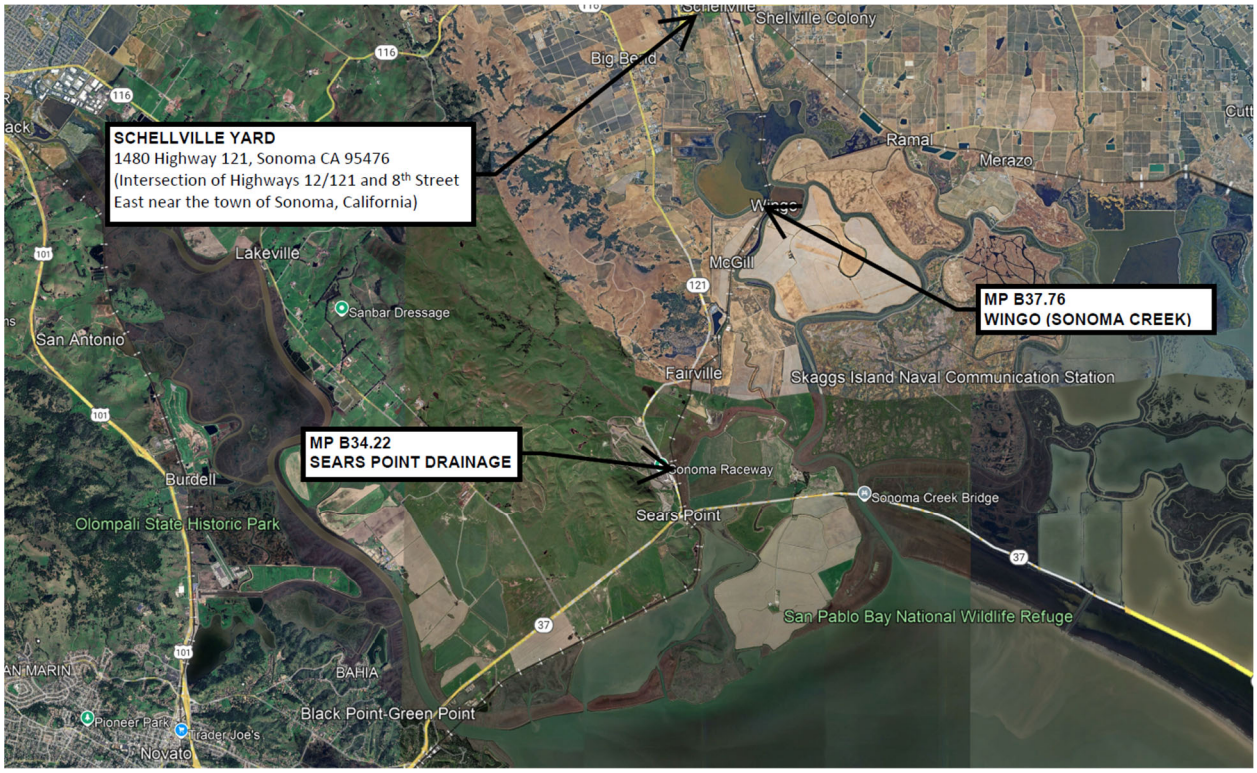

3. Work Hours

This work is anticipated to be conducted during daytime work hours 7:00AM to 7:00PM (Pacific). Contractor may opt to work weekends due to non-residential remote locations.

4. Site Access

   e. Bridge Access

      i. The bridges are accessible from the track, and the track is accessible from multiple public road crossings and the SMART Schellville Freight Depot yard.

      ii. Several of the bridges are also accessible from adjacent roadways. Contractor shall coordinate access from adjacent roadways, as necessary.

   f. Track Access

      i. Contractor shall coordinate track access with SMART's Freight Operations department to accommodate the work without disrupting freight traffic.

      ii. Freight traffic is typically twice a week along the Brazos Junction at varying times.

      iii. The track is accessible from multiple public road crossings and the Schellville Freight Depot Yard.

5. Permits:

   No environmental permits are required for this work. Contractor shall implement standard best management practices to protect the environment.

   Contractor shall obtain daily Track Access Permits from SMART Operations Department for the work within the right of way.

C. General Information

1. Roadworker Protection Training

   Work will be performed within an active railroad right-of-way. Contractor's employees and subcontractor's employees who will be working onsite must complete the railroad operations and safety training before being permitted to work within the railroad right-of-way. The cost of the online training is approximately $30.00 per person. SMART will provide a link to the training program upon execution of the contract.

2. Engineer's Estimate

   The Engineer's Estimate is $563,000, which includes the additive bid item.

3. Funding

   This Agreement is funded using State of California and Local Funds. Contractor shall comply with all applicable laws and regulations while performing work under the Agreement.

4. DBE & SBE Participation Strongly Encouraged

   This contract does not have a DBE or SBE goal requirement; however, SMART is committed to ensuring full and open competition and equitable treatment of all potential proposers and encourages Disadvantaged Business Enterprise (DBE) and Small Business Enterprise (SBE) participation in its contracts.

   DBE Directory: https://dot.ca.gov/programs/civil-rights/dbe
   SBE Search:
   https://caleprocure.ca.gov/pages/PublicSearch/supplier-search.aspx?psNewWin=true

5. eProcurement Portal

   The Sonoma-Marin Area Rail Transit District (SMART) conducts its solicitation and procurement process electronically through a dedicated Procurement Portal located at https://sonomamarintrain.bonfirehub.com. Please be sure to register your company in order to obtain all bid documents, communicate with SMART, access addenda, receive notifications, and submit your proposal.

6. Award

   The lowest responsive responsible bidder will be awarded the agreement. The lowest bid will be determined by the "Total Project Bid Price (Total Base Bid Price + Total Additive Bid Price)" as listed on Form BF – Bid Form.

1.2 Completion Timeline

The work is expected to take approximately seven (7) working days.

Contractor shall achieve Substantial Completion of the project within one

hundred and fifty (150) calendar days from the date the Notice to Proceed is issued.

Contractor shall achieve full project completion and final invoicing of the project within one hundred and eighty (180) calendar days following the date the Notice to Proceed is issued.

1.3 Minimum Requirements

The following are the minimum requirements a Bidder must meet in order to be considered:

A. A valid Contractor State License Board ("CSLB") A – General Engineering Contractor's License

B. Active Registration with the California Department of Industrial Relations ("DIR")

1.4 Prevailing Wage Requirements

This work is subject to compliance monitoring and enforcement by the Department of Industrial Relations. The successful Bidder must comply with all prevailing wage laws applicable to the scope of services and related requirements contained in the Agreement.

All Bidders and any Subcontractors listed, must be currently registered and qualified to perform public work pursuant to Labor Code section 1725.5. SMART requires proof of current registration by Contractor and all listed Subcontractors as a condition to be awarded a contract, subject only to the allowances of Labor Code section 1771.1.

Pursuant to Section 1773 of the Labor Code, the general prevailing wage rates in the county, or counties, in which the work is to be done have been determined by the Director of the California Department of Industrial Relations ("DIR"). Copies of the general prevailing wage rates and per diem wages for each craft, classification, or type of worker needed to execute the Contract, as determined by Director of the Department of Industrial Relations, are located at http://www.dir.ca.gov/DLSR/PWD/index.htm and are deemed included in this Solicitation. The prevailing wage rates may also be reviewed at the District's offices.

Contractor shall post the applicable prevailing wage rates at the Site, in addition to all other job site notices prescribed by regulation.

1.5 Department of Industrial Relations ("DIR") Registration

In order to bid and perform public works on this project, all tiers of subcontractors, including trucking/hauling firms that are subcontracted to perform services, must be registered with the California Department of Industrial Relations (DIR), pursuant to Senate Bill 854, at the time bids are due and throughout the duration of the project. No contractor or subcontractor may be listed on a bid proposal for a public works project unless registered with the DIR pursuant to Labor Code Section 1725.5 [with limited exceptions from this requirement for bid purposes only under Labor Code section 1771.1(a)].

1.6 California Air Resources Board ("CARB") Requirements

The California Air Resources Board ("CARB") implemented amendments to the In-Use Off-Road Diesel-Fueled Fleets Regulations ("Regulation") which are effective on January 1, 2024 and apply broadly to all self-propelled off road diesel vehicles 25 horsepower or greater and other forms of equipment used in California. A copy of the Regulation is available at https://ww2.arb.ca.gov/sites/default/files/barcu/regact/2022/off-roaddiesel/appa-1.pdf. Bidders are required to comply with all CARB and Regulation requirements, including, without limitation, all applicable sections of the Regulation, as codified in Title 13 of the California Code of Regulations section 2449 et seq. throughout the duration of the Project. Bidders must provide, with their Bid, copies of Bidder's and all listed subcontractors' most recent, valid Certificate of Reported Compliance ("CRC") issued by CARB. Failure to provide valid CRCs as required herein may render the Bid non-responsive.

SMART is a Public Works Awarding Body, as defined under Title 13 California Code of Regulations section 2449(c)(46). Accordingly, Bidders must submit, with their Bids, valid Certificates of Reported Compliance ("CRC") for the Bidder's fleet and for the fleet(s) of its listed subcontractors (including any applicable leased equipment or vehicles). Bidder must additionally complete and submit the Fleet Compliance Certification, included in the Bid Documents. Failure to provide a CRC for the Bidder, and for all listed subcontractors, or failure to complete the Fleet Compliance Certification, may render the Bid non-responsive.

1.7 Bid Guaranty

Each bid must be accompanied by a Bid Guaranty in the form of a Certificate of Deposit, Certified or Cashier's Check, or Bid Bond, in an amount equal to at least ten percent (10%) of the Bidder's Grand Total Bid Price. The Bid Guaranty will be retained by the District and applied to any and all damages

sustained by the District in the event that the successful Bidder fails or refuses to enter into the Contract awarded to it and to furnish all required bonds and Certificates of Insurance.

Bid Guaranty: *Original* Bid Guaranty must be received by SMART at the following address by the bid deadline. Please submit the bid guaranty in a sealed envelope addressed as follows:

Sonoma-Marin Area Rail Transit District
Attn: Procurement Department
5401 Old Redwood Hwy, Suite 200
Petaluma, CA 94954
Solicitation # FR-BB-25-001
Brazos Railroad Timber Bridge Repairs – Phase II
(Name and Address of Bidder)

Retaining of Bid Guaranty: SMART may retain the Bid Guaranty of other than the Apparent Low Bidder for a period of sixty (60) calendar days after the award or until full execution of the Contract, whichever first occurs. Upon full execution of the Contract, SMART shall inform the respective unsuccessful Bidders that their Bid Guaranty has been released.

1.8 Contract Bonds

A. General Information

All alterations, extension of time, extra and additional work, and other changes authorized by the Contract Documents may be made without securing the consent of the surety or sureties on the Contract Bonds.

B. Payment Bond (Required if Award is Greater than $25,000)

Contractor shall be required to furnish a Payment Bond (Labor and Materials Bond) in an amount not less than 100 percent of the Contract price, excluding allowances. Payment bond shall be executed by an admitted surety insurer (California Civil Code Section 9554). An "admitted surety insurer" shall be defined as follows:

A corporate insurer or a reciprocal or interinsurance exchange to which the Insurance Commissioner has issued a certificate of authority to transact surety insurance in this state, as defined in Section 105 of the Insurance Code (California Code of Civil Procedures Section 995.120).

Bidder shall submit the Payment Bond on Document 00 61 13.16 "Payment Bond" or another form approved by SMART.

C. Performance Bond (Required if Award is Greater than $25,000)

Contractor shall be required to furnish a Performance Bond in an amount not less than 100 percent of the Contract price, excluding allowances. Performance bond shall be executed by an admitted surety insurer (California Civil Code Section 9554). An "admitted surety insurer" shall be defined as follows:

A corporate insurer or a reciprocal or interinsurance exchange to which the Insurance Commissioner has issued a certificate of authority to transact surety insurance in this state, as defined in Section 105 of the Insurance Code (California Code of Civil Procedures Section 995.120).

Bidder shall submit the Performance Bond on Document 00 61 13.13 "Performance Bond" or another form approved by SMART.

1.9 Retention

Retention of each progress payment will be in effect in the amount of 5%.

Pursuant to Public Contract Code Section 22300, the successful Bidder may submit certain securities in lieu of SMART withholding retention of payments during the Project. Please reference FORM EA for the Escrow Agreement for Security Deposits in Lieu of Retention.

1.10 Insurance Requirements

SMART is an active railroad and the insurance requirements for this Agreement may require special railroad endorsements and/or railroad protective insurance. Please *carefully review* the requirements identified in the "Document 00 52 00 Sample Agreement". Contractor is required to obtain and maintain the insurance policies listed.

1.11 Equal Employment Opportunity

In connection with the performance of the resulting Agreement, Contractor shall be in full compliance with all applicable federal, state, and local laws, rules, and regulations in regard to Equal Employment, and more specifically, nondiscrimination in employment because of race, color, ancestry, national origin, religion, sex, marital status, age, medical conditions, disability, or any other reason.

Furthermore, Contractor shall be in full compliance with all applicable Federal, State, and Local safety and health standards, laws, and regulations.

1.12 Procurement Schedule

The Procurement Schedule is listed below and is subject to change at the sole discretion of the District.

Date	Event
May 27, 2025	Issue Invitation for Bid
June 5, 2025	Pre-Bid Meeting (Virtual), 10:00 AM (Pacific)
June 16, 2025	Deadline for Questions, 2:00 PM (Pacific)
June 18, 2025	Final Addendum Issued by SMART
July 1, 2025	Bids Due to SMART, 2:00 PM (Pacific)
July 1, 2025	Public Bid Opening, 2:30 PM (Pacific)
July 1, 2025	Notice of Apparent Low Bidder Issued
July 1, 2025 – July 11, 2025	Evaluation of Bids
July 11, 2025	Notice of Intent to Award Issued
August 20, 2025	Board of Director Review (As Required)
August 21, 2025	Award Agreement

1.13 Pre-Bid Meeting Information

SMART will host a virtual Pre-Bid Meeting at 10:00 AM (Pacific) on Thursday, June 5, 2025, to discuss project scope and to consider such matters as Bidders may request.

Registration is required in order to attend the Pre-Bid Meeting. Register at: https://sonomamarintrain-org.zoom.us/meeting/register/aoEJ-DoPSYCEzbBeVIOWZQ

Bidders are not required to attend the Pre-Bid Meeting as a condition to bidding; however, attendance is highly encouraged.

The Pre-Bid Meeting is expected to last approximately 1 hour.

1.14 Public Bid Opening Information

Public Bid Opening to take place at 2:30 p.m. (Pacific) at 5401 Old Redwood Hwy, First Floor, Petaluma, CA 94954 on the day of the bid

deadline. Electronically sealed bids received will be read out loud and tabulated. *Attendance is NOT mandatory in order to win the award.*

Bid results will be made public and posted to SMART's procurement portal following the opening. SMART's procurement team will determine the Apparent Low Bidder at this public bid opening. Bids will not be made available for public inspection at the bid opening in order for the District to thoroughly review all submittals.

1.15 Bidder Questions and Clarification Requests

All questions, inquiries, requests for information, requests for clarification and other communications regarding the Invitation for Bids must be submitted using the District's Procurement Portal located at https://sonomamarintrain.bonfirehub.com by clicking on the Vendor Discussions tab of the message section located on the project page.

The questions submitted must reference the exact section of the Invitation for Bid, Contract, or other document when submitting the request. Requests will only be reviewed if submitted by the date specified in the Procurement Schedule.

The District may, in its sole discretion, choose whether or not to respond to questions received. If the District chooses to respond, it may respond by a written Addendum to the Invitation for Bid Documents. Any response that the District may choose to make will not alter the Invitation for Bid unless it is incorporated into an Addendum. It is the Bidder's responsibility to check the District's Procurement Portal regularly for updates to the solicitation.

If a Bidder fails to notify SMART at least seven (7) days prior to the date for submission of Bids of a known error in the Invitation for Bid, or an error that reasonably should have been known, the Bidder shall submit a Bid at its own risk. SMART reserves the right not to consider requests for clarification. Any changes or modifications to the Invitation for Bid within the timeframe will be issued as an Addenda.

Rules of Contact

a. Bidders shall only correspond or communicate with the District regarding this Invitation for Bid through the District's Procurement Portal Vendor Discussions tab;

b. Bidders are prohibited from contacting SMART employees or officials regarding the Invitation for Bid, except through the process identified above;

c. Bidders shall not contact any person serving on the evaluation regarding this Invitation for Bid;

d. Any communications from the Bidders determined to be improper, at the sole discretion of the District, may result in disqualification of the Bidder;

e. The District will not be bound by any oral exchange or any other information or exchange that occurs outside the official process specified herein;

f. Bidders are prohibited from contacting or including in their bid the following Stakeholders:

- American Rail Engineers Corporation

1.16 Brand or Approved Equal Substitutions

a. It is understood that specifying a brand name or specific types of components and/or equipment in these solicitation documents shall not relieve the bidder from its responsibility to furnish the end product in accordance with the warranty and contractual requirements. The bidder is responsible for notifying the District of any inappropriate brand names, or types of components and/or equipment that may be called for in these solicitation documents, and to propose a suitable substitute for consideration. If the phrase “or approved equal” is inadvertently omitted, it is implied after any brand name.

b. Unless otherwise specifically provided in the solicitation documents, reference to any equipment, material, article or patented process by trade name, make, or catalog number shall be regarded as establishing a standard of quality and shall not be construed as limiting competition; and a bidder may, at its option, use any equipment, material, article, or process which, in the judgement of the District, is equal to that designated. To do so a bidder shall furnish, at its own expense, all test results, technical data, and background information required by the District in making the determination as to whether the proposed equipment, material or article or process, in the judgement of the District, is equal to that designated.

c. The District shall be the sole judge as to the comparative quality and suitability of alternative equipment, articles, material or process, and its decision shall be final.

d. Requests for Approved Equals must be in writing on SMART's "Document 00 63 25 - Substitution Request Form" and submitted using the District's Procurement Portal located at https://sonomamarintrain.bonfirehub.com by clicking on the Vendor Discussions tab of the message section located on the project page. Bidders must submit the request by the Deadline for Questions identified in the "Procurement Schedule". After that date, SMART will not accept "or equal" substitution requests. To assess "or equal" acceptability of product or system, the Bidder shall provide all information and documentation required for SMART to be able to make a determination. Insufficient information will be grounds for rejection of substitution. SMART shall issue in writing its decision as to whether the proposed substitute item is an Equal item via the issuance of an Addendum.

1.17 Addenda

The District reserves the right to issue Addenda at any time during the period of the procurement. Any such Addenda will be bound into and included as part of the awarded Agreement, as appropriate. The District will post Addenda on the project tab at https://sonomamarintrain.bonfirehub.com. It is the Bidder's responsibility to check the District's Procurement Portal regularly for updates to the solicitation. Bidders shall be responsible for providing copies of any Addenda to their Subcontractors.

Persons or firms that obtain the Invitation for Bid from sources other than the District bear the sole responsibility for obtaining, from such sources any Addenda issued by the District for the Invitation for Bid. The District will not be bound by any explanation, clarification, or interpretation, oral or written, regardless of who made it, that is not incorporated into the Invitation for Bid by an Addendum.

2. INSTRUCTIONS TO BIDDERS

2.1 Bid Submission Process

Bidders shall submit one electronic Bid. The Bid shall be uploaded at https://sonomamarintrain.bonfirehub.com within the project page for this solicitation by the bid deadline identified in the Procurement Schedule. **Hardcopy bids, bids submitted by email, and faxed bids will not be considered.** SMART is not responsible for submissions delayed for any reason. The online submission system will not allow for any submission to be accepted after the stated date and time.

Bids shall be prepared using the following format:

Part	Contents
A	Bid Form
B	Questionnaire and Financial Statement
C	Required Certificates and Forms

PART A. BID FORM

a) FORM BF - SMART's Bid Form

PART B. QUESTIONNAIRE & FINANCIAL STATEMENT

a) FORM QF - Questionnaire & Financial Statement

PART C. REQUIRED CERTIFICATES AND FORMS

a) W-9 Tax Form or Equivalent

b) Certificates of Reported Compliance ("CRC") for the Bidder's fleet and for the fleet(s) of its listed subcontractors (including any applicable leased equipment or vehicles).

c) Disadvantaged Business Enterprise (DBE) and/or Small Business Enterprise (SBE) certification document(s) – Required if you stated yes on SMART Bid Form (Form BF)

2.2 Conditions of Bid

By submitting a Bid, the Bidder is agreeing that it has undertaken all necessary due diligence and accepts all of the terms and conditions included in this Invitation for Bid and SMART's Sample Agreement.

2.3 Modifications to a Bid prior to Due Date

In the event a Bidder submits a Bid and needs to make revisions or withdraw their Bid prior to the Bid Deadline, instructions for doing so can be found here: https://vendorsupport.gobonfire.com/hc/en-us/articles/6848514343447-Can-I-revise-my-submission. Once the Submission Deadline has passed, revisions are not permitted.

2.4 Cost of Bidding

The Bidder shall bear all costs and expenses whatsoever for the preparation,

submittal, discussions, interviews, and negotiations related to the Bid.

2.5 Bid Irregularities and Discrepancies

Discrepancies between the multiplication of units of Work and unit prices will be resolved in favor of the unit prices. Discrepancies between the indicated sum of any column of figures and the correct sum thereof will be resolved in favor of the correct sum. Discrepancies between written words and figures will be resolved in favor of the words.

Symbols such as commas and dollar signs will be ignored and have no mathematical significance in establishing any unit price or item total or lump sums. Written unit prices, item totals and lump sums will be interpreted according to the number of digits and, if applicable, decimal placement. Cents symbols also have no significance in establishing any unit price or item total since all figures are assumed to be expressed in United States dollars and/or decimal fractions of a dollar.

2.6 Multiple Bids

More than one Bid from a Bidder will not be considered.

2.7 Relief of Bidders

Pursuant to Public Contract Code sections 5100 to 5107, inclusive, concerning relief of bidders and in particular to the requirement therein, that if the bidder claims a mistake was made in the bid presented, the bidder shall give the District written notice within five (5) working days after the opening of the bid of alleged mistake, specifying in the notice detail how the mistake occurred.

2.8 General Bid Information

A. Bids shall be submitted as described in the Invitation for Bid documents and shall be on the forms provided.

B. All blank spaces in the Bid Forms must be completed as required.

C. All price information shall be shown clearly legible, in figures, where required. No changes may be made on the Bid Forms.

D. The successful bidder may be required to prepare a Schedule of Values based on the bid items on the Bid Form submitted to provide additional detail which will be used in conjunction with payment.

2.9 Warranty of Title

By submitting a bid, Bidder warrants to SMART that the title to the material, supplies or equipment covered by the Agreement or Purchase Order, when delivered to SMART is free from all liens and encumbrances.

2.10 Warranty of Fitness

By submitting a bid, Bidder warrants to SMART that all materials furnished meet the requirements and conditions required by SMART under this Solicitation; are fit for the purpose intended and fulfills its design functions; are free of all patent and latent defects in design, materials, and workmanship; and perform satisfactorily.

2.11 Non-Collusion Certification

By submitting a bid, the Bidder represents and warrants that such bid is genuine and not sham or collusive in the interest or in behalf of any person not therein named, and that the bidder has not, directly or indirectly, induced or solicited any other bidder to put in a sham bid, or any other person, firm, or corporation to refrain from bidding, and that the bidder has not in any manner sought by collusion to secure to the bidder an advantage over any other bidder.

3. BID EVALUATION

Following the Public Bid Opening, SMART's procurement staff will review and evaluate the bids for responsiveness and responsibility prior to issuing the Notice of Intent to Award.

3.1 Responsiveness Evaluation

Responsiveness is determined by responding to all the mandatory bidding requirements.

The District reserves the right, in its sole discretion, to determine that a Bid is non-responsive based upon any of the following:

a) The Bid is not properly signed by an authorized party.
b) Failure to provide all required parts of the Bid.
c) The Bid is illegible or contains omissions, erasure, alteration, or items not called for in the Invitation for Bid.
d) The Bid contains unauthorized conditions or other irregularities of any kind, if the District determines that such conditions or irregularities

make the Bid incomplete, indefinite, or ambiguous as to its meaning.

e) Any alterations of forms, without prior approval of the District.
f) Requested information deemed material by the District is not provided.
g) Failure to acknowledge receipt of all Addenda.
h) More than one Bid is received from a Bidder.
i) The Evaluation Committee is not able to confirm the accuracy of all technical data, qualifications, or other information provided in the Bid.
j) Due to an organizational conflict of interest, the Bidder has an unfair advantage, in the opinion of the District.
k) Any other reason for which the District determines that the Bid is non-responsive.

3.2 Responsibility Evaluation

As a pre-requisite to an award of a Contract, the District will determine whether the low bidder meets the definition of a "responsible bidder" as set forth in Public Contract Code Section 1103: "a bidder who has demonstrated the attribute of trustworthiness, as well as quality, fitness, capacity, and experience to satisfactorily perform the work."

Additionally, the District will ensure the bidder meets the definition of "responsible contractors" as stated in 49 U.S.C. 5325 and 2 CFR Part 200.318 (h).

In order to evaluate Bidder's ability to perform and provide the work to SMART's satisfaction, SMART may conduct reasonable investigations and reference checks of Bidder, proposed Subcontractors, suppliers and other persons and organizations as SMART deems necessary to assist in the evaluation of any Bid. Submission of a Bid constitutes Bidder's consent to the foregoing. SMART shall have the right to consider information provided by sources other than Bidder. SMART shall also have the right to communicate directly with the Bidder's surety regarding the Bidder's Bonds.

Additionally, the District may review any information about the bidder, including information submitted with FORM QF "Questionnaire & Financial Statement", evidence of good standing with the California Secretary of State, registration status with the System for Award Management ("SAM") at www.sam.gov, licensing agencies, regulatory agencies, and any other source deemed applicable by SMART.

Failure to so demonstrate responsibility may result in the rejection or disqualification of the low-bidder. In such event, the second lowest bidder may be issued a Notice of Award.

3.3 Single Bid Response

In the event of a single-bid response, SMART reserves the right to conduct a price and/or cost analysist of the bid to verify that the bid price is fair and reasonable. The Bidder will be expected to cooperate in this process and to submit cost and pricing data to verify that the bid price is fair and reasonable. The right of examination will extend to all documents necessary to permit adequate evaluation of the cost of the product(s) and the prices quoted. Failure to submit the data as requested by SMART may result in the Bidder being declared non-responsive.

4. AWARD

4.1 No Obligation to Award

The District shall be under no obligation to award an Agreement should the District decide, in its sole discretion, that it is in its best interests not to award the Agreement. At its discretion, the District may cancel the procurement in its entirety, and re-procure by any method at a later date.

4.2 Award

The District intends to award the Agreement to the lowest responsive responsible bidder whose bid complies with the specifications in a manner satisfactory to SMART's best interests, as determined by SMART.

Except as permitted by applicable law, no Bidder may withdraw its bid for a period of ninety (90) calendar days after the date of bid opening. Each Bidder will be notified of any award of the Contract by the District.

4.3 Execution of Contract

The successful Bidder shall execute and submit the following documents to SMART <u>within five (5) Business Days</u> following the issuance of the Notice of Award:

a. Agreement
b. Insurance Certificates and Required Endorsements
c. Contract Bonds (Payment Bond, Performance Bond, etc.)

4.4 Failure to Execute Contract

Failure of the winning bidder to promptly and properly execute the Contract or furnish acceptable Contract bonds, or certificates of insurance, shall be just cause for the cancellation of the award, the forfeiture of such

bidder's Bid Guaranty (If Required), and debarment from bidding on future SMART opportunities.

4.5 Notice to Proceed

After the execution of the Contract and submission of the required Contractor's Bonds and Certificates of Insurance, SMART will issue a Notice to Proceed, Limited Notice to Proceed, or multiple Notices to Proceed with respect to specific tasks, indicating the Work may commence on the date indicated.

4.6 Release of Information

Awardee must receive prior permission from SMART before releasing any reports, information or promotional materials prepared in connection with this Invitation for Bid and subsequent contract award. The Awardee shall not use the District's logo or any other proprietary material without the prior written permission of the District. The awardee shall provide a copy or copies of any such material to SMART for first review.

5. PROTEST PROCEDURES

The Sonoma-Marin Area Rail Transit District (SMART) maintains written procurement protest procedures that must be followed for all protests. SMART's Procurement Protest Procedures may be downloaded at https://sonomamarintrain.org/business. Copies of these protest procedures are also available at SMART's Headquarters Office located at 5401 Old Redwood Hwy, Suite 200, Petaluma, CA 94954. Failure to comply with the rules and procedures specified in SMART's Procurement Protest Procedures will render a protest untimely and/or inadequate and shall result in its rejection.

6. LEGAL, CONTRACTUAL, AND FINANCIAL INFORMATION

6.1 Bid and Accompanying Documents

Signing of Bid: The Bid shall be signed by all parties making up the Bidder. If the Bidder is a corporation, the Bidder shall be signed by an authorized officer of the corporation; if the Bidder is a partnership, the Bidder shall be signed by a general partner having the power to bind the partnership contractually; if the Bidder is a Joint Venture, the Bidder shall be signed by all equity members of the Joint Venture; or if the Bidder is signed by an attorney in fact for a corporation or partnership, a power of

attorney shall be submitted with the Bid. A Bid not properly signed may be rejected as irregular and unauthorized.

6.2 Conflict of Interest

Depending on the nature of the equipment or product being furnished, Vendors and Subcontractors are subject to the same conflict of interest prohibitions that apply to District employees. These include, but are not limited to, the requirements of California Law (including Government Code Sections 1090 et seq., and 87100 et seq., and Title 2, Division 6 of the California Code of Regulations). The District reserves the right to disqualify any Bidder under the Invitation for Bid if the District, in its sole discretion, deems that the potential conflicts of interest is likely to impair or restrict the Bidder's ability to furnish services contemplated within the Agreement.

At the time of submitting a Bid, Bidders shall disclose to SMART any and all potential organizational conflicts of interest. SMART will evaluate potential conflicts on a case-by-case basis. By responding to this Bid, Bidder agrees to facilitate SMART's efforts to share information, and agrees to comply with any other measures required by SMART to mitigate or eliminate conflicts of interest.

6.3 Economic Sanctions

On March 4, 2022, Governor Gavin Newsom issued Executive Order N-6-22 regarding Economic Sanctions against Russia and Russian entities and individuals. "Economic Sanctions" refers to sanctions imposed by the U.S. government in response to Russia's actions in Ukraine, as well as any sanctions imposed under state law. As a recipient of state and federal funds, the District is prohibited from contracting with individuals or entities that are determined to be a target of Economic Sanctions. By submitting a bid, Bidder represents that it is not a target of Economic Sanctions. Should the District determine Bidder is a target of Economic Sanctions or is conducting prohibited transactions with sanctioned individuals or entities, that shall be grounds for rejection of the Bid any time prior to contract execution, or if determined after contract execution, shall be grounds for termination by the District.

6.4 Confidentiality

The issue of confidentiality will be stressed during the entire evaluation and selection process. The District recognizes that the integrity of any contracting process is critical to the fairness and the confidence that Bidders and the public have in a public agency. Therefore, to the extent consistent with the requirements of applicable law, the deliberations of the

evaluation committee will be held in the strictest confidence, and all information provided by Bidders or generated by the evaluation will be safeguarded until the Notice of Intent to Award has been issued.

6.5 Public Disclosure

The California Public Records Act (CPRA) (Government Code Sections 7920.000, et seq.) mandates public access to public records not exempt from disclosure under the CPRA. All written correspondence, exhibits, photographs, reports, printed material photographs, tapes, electronic disks, and other graphic and visual aids submitted to the District during this procurement process, including as part of the response to this Solicitation, are, upon their receipt by District, the property of the District and are subject to CPRA. None of the aforementioned materials will be returned to the submitting parties. Respondents should familiarize themselves with the provisions of the Act.

By submitting a bid, a bidder (i) consents to the release of its bid, in the form submitted to SMART and without any redactions, and (ii) waives all claims against SMART, its directors, officers, employees, and agents, for the disclosure of all or a portion of a Bid submitted under this Invitation for Bid. In no event shall District, or any of its agents, representatives, Contractors, directors, officers, or employees be liable to any Bidder for the disclosure of all or a portion of a Bid submitted under this Solicitation.

7. EXISTING SITE CONDITIONS

This section applies to all supplied existing conditions information and all other information supplied regarding existing conditions either above ground or below ground. This section also sets forth the terms and conditions under which Bidder may review, study, use, or rely upon existing conditions information, including geotechnical data if applicable, concerning existing conditions at or contiguous to the Site. This section, the available geotechnical data, and the supplied existing conditions information are not considered Contract Documents.

7.1 General Information

Bidders may examine any available existing conditions information (e.g., record documents, specifications, studies, drawings of previous work, geotechnical data) by giving SMART reasonable advance notice.

7.2 Reports and Information

A. Existence of Reports. SMART, its consultants, and prior contractors may have collected documents providing a general description of the Site and conditions of the Work. These documents may consist of geotechnical reports for and around the Site, contracts, contract specifications, tenant improvement contracts, as-built drawings, utility drawings, and information regarding Underground Facilities. These reports, documents and other information are not part of the Contract Documents.

B. Inspection of Reports. Bidders may inspect reports and information regarding existing conditions, if available, at SMART's main office, and may obtain copies upon Bidder's payment for the costs of reproduction and handling. These reports, documents and other information, are not part of the Contract Documents. Nevertheless, by submitting a Bid, Bidder accepts full responsibility for reviewing, knowing and understanding the contents of all of these materials.

C. Inclusion in Project Manual. Geotechnical reports and information regarding existing conditions may also be included in the Project Manual, if available, but neither shall be considered part of the Contract Documents.

7.3 Use of Information on Existing Conditions

A. Aboveground Existing Conditions. Under no circumstances shall SMART be deemed to make a warranty or representation of existing aboveground conditions, as-built conditions, or other aboveground actual conditions verifiable by reasonable independent investigation. These conditions are verifiable by Bidder by the performance of its own independent investigation that Bidder must perform prior to bidding and Bidder must not rely on the information supplied by SMART regarding existing conditions. Bidder represents and agrees that in submitting its Bid, it is not relying on any information regarding existing conditions supplied by SMART.

B. Underground Facilities. Information supplied regarding existing Underground Facilities at or contiguous to the Site is based on information furnished to SMART by others (e.g., the builders of such Underground Facilities or others). Except as expressly identified within the Invitation for Bid Documents, SMART does not assume responsibility for the accuracy, completeness or thoroughness of this information, and Bidder is solely responsible for any interpretation or conclusion drawn from this information. Except as expressly identified within the Invitation for Bid Documents, SMART will be responsible

only for the general accuracy of information regarding its own Underground Facilities. This express assumption of responsibility applies only if Bidder has conducted the independent investigation required of it and discrepancies were not apparent.

7.4 Limited Reliance Permitted on Certain Information

A. Geotechnical Data. Except as expressly identified within the Invitation for Bid Documents, SMART does not warrant, and makes no representation regarding, the accuracy or thoroughness of any geotechnical data. Bidder represents and agrees that in submitting its Bid, it is not relying on any geotechnical data supplied by SMART, except as specifically set forth herein.

B. Technical Data. Bidder may rely upon the general accuracy of the "technical data" contained in the geotechnical reports and existing conditions information identified above, but only insofar as it relates to subsurface conditions, provided Bidder has conducted the independent investigation required of it and discrepancies were not apparent. The term "technical data" in the referenced reports and drawings shall be limited as follows:

1) The term "technical data" shall include actual reported depths, reported quantities, reported soil types, reported soil conditions, and reported material, equipment, or structures that were encountered during subsurface exploration.

2) The term "technical data" does not include, and Bidder may not rely upon, any other data, interpretations, opinions or information shown or indicated in such drawings or reports that otherwise relate to subsurface conditions or described structures.

3) The term "technical data" shall not include the location of Underground Facilities.

4) Bidder may not rely on the completeness of reports and drawings for the purposes of bidding or construction. Bidder may rely upon the general accuracy of the "technical data" contained in such reports or drawings.

5) Bidder is solely responsible for any interpretation or conclusion drawn from any "technical data" or any other data, interpretations, opinions, or information contained in supplied existing conditions information.

7.5 Investigations

A. Before submitting a Bid, each Bidder shall be responsible to obtain such additional or supplementary examinations, investigations, explorations, tests, studies and data concerning conditions (surface, subsurface, and Underground Facilities) at or contiguous to the Site or otherwise, which may affect cost, progress, performance or furnishing of Work or which relate to any aspect of the means, methods, techniques, sequences or procedures of construction to be employed by Bidder and safety precautions and programs incident thereto or which Bidder deems necessary to determine its Bid for performing and furnishing the Work in accordance with the time, price and other terms and conditions of Contract Documents.

B. SMART has provided time in the period prior to bidding for Bidder to perform these investigations and to ask questions.

C. Notwithstanding the foregoing, Potential contaminates may be encountered along the SMART right-of-way during Contract work that were not included in the contract documents. If hazardous materials are encountered, the Contractor shall immediately notify SMART and determine the limits of the hazardous materials. SMART will retain the risk for costs that arise due to the discovery of unanticipated hazardous materials during the performance of the work. SMART shall have no responsibility or liability for any hazardous materials generated by the Contractor or its subcontractors. The Contractor shall be responsible to arrange the necessary resources to be able to remove and dispose of such materials in a timely manner and in accordance with all applicable requirements.

8. DISTRICT'S RESERVATION OF RIGHTS

In connection with this procurement, the District reserves to itself all rights (which rights shall be exercisable by the District in its sole discretion) available to it under the Public Contract Code and applicable law, including without limitation, the following, with or without cause and with or without notice:

a) Reject any or all Bids, or information submitted related to a Bid;

b) Issue a new Invitation for Bid, or modify dates set or projected in the Invitation for Bid;

c) Cancel, modify, or withdraw the Invitation for Bid, in whole or in part at any time prior to the execution of the Agreement without incurring any cost obligations or liabilities;

d) Issue Addenda, supplements and modifications to the Invitation for Bid;

e) Modify the Invitation for Bid process;

f) Appoint an Evaluation Committee to review Bids and to consider the advice and assistance of non-District experts in any subject matter in Bid evaluation;

g) Hold meetings and conduct discussions and correspondence with a Bidder to seek an improved understanding and evaluation of the Bid;

h) Seek or obtain data from any source that has the potential to improve the understanding and evaluation of the Bid;

i) Waive weaknesses, informalities, and minor irregularities in Bids;

j) Disqualify any Bidder that changes its organization (as represented in its Bid) without District written approval;

k) Hold the price of bids under consideration for up to 90 calendar days after the bid deadline until the Award is made unless there is a mutual agreement to extend the 90-day time limit as provided in the Invitation for Bid;

l) Disclose information contained in the Bids to the public as described herein;

m) Refuse to consider a Bid, once submitted, or reject a Bid if such refusal or rejection is based upon, but not limited to, the following;

n) Failure on the part of a Principal Participant to pay, satisfactorily settle, or provide security for the payment of claims for labor, equipment, material, supplies, or services legally due on previous or ongoing contracts;

o) More than one bid submitted by the same bidder for the same work under the Bidder's own name or under a different name;

p) Evidence of collusion between a prospective Bidder (or any Principal Participant or Designer) and other Bidders (or Principal Participants or Designers);

q) Further negotiate pricing, or terms and conditions, in advance of issuing an Agreement (If Allowable);

r) Exercise any other right reserved or afforded to the District under this

Invitation for Bid or under the Public Contract Code and applicable law; and/or

s) SMART may require the apparent low bidder to submit cost data in sufficient detail to permit analysis of the cost elements that comprise the bid prices. In such instances, the apparent low bid may, at the discretion of SMART, be subject to audit.

t) The Bidder acknowledges that, by submitting a Bid in response to this Invitation for Bid, it agrees with these disclaimers and waives any right to legally challenge or protest any District's actions that exercise these disclaimers.

ATTACHMENT B

DOCUMENT 00 70 00 - GENERAL CONDITIONS

BRAZOS RAILROAD TIMBER BRIDGE REPAIRS
PHASE 2

MP B26.26, B34.22 & MP B37.76

CONTRACT NO. FR-BB-25-001

(THIS PAGE LEFT INTENTIONALLY BLANK)

Table of Contents

1 INTERPRETATION OF CONTRACT 1

1.1 Defined Terms 1

1.2 Contract Documents 1

2 BID PERIOD INVESTIGATIONS AND SUBCONTRACTING 2

2.1 Investigation Prior To Bidding 2

2.2 Supplied Information on Underground Existing Conditions 3

2.3 Supplied Information on Above-Ground Existing Conditions 4

2.4 Subcontractors 4

3 CONTRACT AWARD AND COMMENCEMENT OF THE WORK 5

3.1 Time Allowances for Performance of Contract Documents 5

3.2 Commencement Of Work 5

4 INDEMNIFICATION 5

4.1 Indemnification 5

5 DRAWINGS AND SPECIFICATIONS 6

5.1 Intent 6

5.2 Drawing Details 7

5.3 Interpretation Of Drawings And Specifications 7

5.4 Checking Of Drawings 8

5.5 Standards To Apply Where Specifications Are Not Furnished 8

5.6 Deviation from Specifications and Drawings 8

5.7 Ownership And Use Of Drawings, Specifications And Contract Documents 8

6 CONSTRUCTION BY SMART OR BY SEPARATE CONTRACTORS 9

6.1 SMART's Right To Perform Construction And To Award Separate Contracts 9

6.2 Mutual Responsibility 9

6.3 SMART's Authority Over Coordination 10

7 PAYMENT BY SMART 10

7.1 Receipt And Processing Of Applications For Payment 10

8 CONTROL OF THE WORK 11

8.1 Subcontractors 11

8.2 Supervision Of Work By Contractor 11

8.3 Observation Of Work By SMART 11

8.4 Access To Work 13

9 WARRANTY, GUARANTY, AND INSPECTION OF WORK 13
9.1 Warranty And Guaranty 13
9.2 Inspection Of Work 15
9.3 Correction Of Defective Work 16
9.4 Acceptance And Correction Of Defective Work By SMART 18
9.5 Rights Upon Inspection or Correction 19
9.6 Samples and Tests Of Materials And Work 19
9.7 Proof of Compliance Of Contract Provisions 19
9.8 Acceptance 19
10 CONTRACTOR'S ORGANIZATION AND EQUIPMENT 20
10.1 Contractor's Legal Address 20
10.2 Contractor Documents At The Work Site 20
10.3 Contractor's Superintendents Or Forepersons 20
10.4 Proficiency in English 21
10.5 Contractor's and Subcontractors' Employees 21
10.6 Contractor's Use Of The Site 21
11 PROSECUTION AND PROGRESS OF THE WORK 21
11.1 Schedules And Examinations Of Contract Documents 21
11.2 Commencement of Work Notification 22
11.3 Submittals 22
11.4 Contractor To Supply Sufficient Workers And Materials 23
11.5 Contractor's Project Data 24
12 CLAIMS BY CONTRACTOR/NON-JUDICIAL SETTLEMENT PROCEDURE 25
12.1 Scope 25
12.2 Procedure 25
12.3 Claim Format 27
12.4 Mediation 28
12.5 Subcontractor Claims 28
12.6 Waiver 29
13 LEGAL AND MISCELLANEOUS 29
13.1 Laws and Regulations 29
13.2 Permits and Taxes 30
13.3 Suspension of Work 30

13.4 Termination of Contract For Cause 30
13.5 Termination of Contract For Convenience 33
13.6 Contingent Assignment of Subcontracts 35
13.7 Remedies and Contract Integration 36
13.8 Patents 37
13.9 Substitution for Patented And Specified Articles 37
13.10 Interest of Public Officers 37
13.11 Limit of Liability 37
13.12 Severability 38
14 MODIFICATIONS OF CONTRACT DOCUMENTS **38**
14.1 Alterations, Modifications and Force Account Work 38
14.2 Time Allowances 39
14.3 Notice of Delay 40
14.4 Non-Compensable Time Extensions; Adverse Weather Parameters 40
14.5 Compensable Time Extensions 41
14.6 Liquidated Damages 41
14.7 Differing Site Conditions 43
14.8 Change Orders Related to Underground Facilities 44
15 WORKING CONDITIONS AND PREVAILING WAGES **45**
15.1 Use Of Site/Sanitary Rules 45
15.2 Protection Of Work, Persons, And Property 46
15.3 Responsibility For Safety And Health 47
15.4 Emergencies 47
15.5 Use of Roadways And Walkways 47
15.6 Nondiscrimination 48
15.7 Prevailing Wages 48
15.8 Environmental Controls 50
15.9 Shoring Safety Plan 50

(THIS PAGE LEFT INTENTIONALLY BLANK)

1 INTERPRETATION OF CONTRACT

1.1 Defined Terms

All abbreviations and definitions of terms used and not otherwise defined in this Document 00 70 00 are set forth in Section 01 42 19 (References Standards). This Document 00 70 00 subdivides at first level into Articles, and then into paragraphs.

1.2 Contract Documents

1.2.A Contract Documents are complementary; what is called for by one is as binding as if called for by all. Contract Documents shall not be construed to create a contractual relationship of any kind between (i) Architect, Engineer or any SMART's Representative and Contractor; (ii) SMART and/or its representatives and a Subcontractor, sub-Subcontractor, or supplier of any Project labor, materials, or equipment; or (iii) between any persons or entities other than SMART and Contractor.

1.3 Precedence Of Documents

1.3.A In the case of discrepancy or ambiguity in the Contract Documents, the following order of precedence shall prevail:

1.3.A.1 Modifications in inverse chronological order (i.e., most recent first), and in the same order as specific portions they are modifying;

1.3.A.2 Document 00 52 00 (Agreement), and terms and conditions referenced therein;

1.3.A.3 Supplementary Conditions;

1.3.A.4 General Conditions);

1.3.A.5 Division 1 Specifications;

1.3.A.6 Drawings and Division 2 through 17 Specifications;

1.3.A.7 Written numbers over figures, unless obviously incorrect (i.e. [six] over [6]);

1.3.A.8 Figured dimensions over scaled dimensions;

1.3.A.9 Large-scale Drawings over small-scale Drawings.

1.3.B Any conflict between Drawings and Division 2 through 17 Specifications will be resolved in favor of the document of the latest date (i.e., the most recent document), and if the dates are the same or not determinable, then in favor of Specifications.

1.3.C Any conflict between a bill or list of materials shown in the Contract Documents and the actual quantities required to complete Work required by Contract Documents, will be resolved in favor of the actual quantities.

2 BID PERIOD INVESTIGATIONS AND SUBCONTRACTING

2.1 Investigation Prior To Bidding

2.1.A Prior to bidding, Contractor must investigate fully the Work of the Contract. Contractor must examine thoroughly, and understand fully the nature and extent of the Contract Documents, Work, Site, locality, actual conditions and as-built conditions, and all other information made available for bidding. Contractor's investigation shall include, but is not limited to, a thorough examination of all reports of exploration and tests of subsurface conditions, as-built drawings, drawings, product specification(s) or reports, available for Bidding purposes, of physical conditions, including Underground Facilities and information identified in the bidding documents and/or Hazardous Materials Surveys (if used), or which may appear in the Contract Documents, and all local conditions, and federal, state and local laws and regulations that in any manner may affect cost, progress, performance or furnishing of Work or which relate to any aspect of the means, methods, techniques, sequences or procedures of construction to be employed by Contractor and safety precautions and programs incident thereto. Contractor shall completely and thoroughly correlate all such information and consider such information fully, prior to and as a condition of submitting its Bid. Contractor shall make inquiry as required in the bidding documents.

2.1.B Prior to submitting its Bid, Contractor shall take care to note the existence and potential existence of Underground Facilities, in particular, above and below grade structures, drainage lines, storm drains, sewers, water, gas, electrical, chemical, hot water, and other similar items and utilities. Contractor shall carefully consider all supplied information, request additional information Contractor may deem necessary, and visually inspect the Site for above ground indications of Underground Facilities (such as, for example not by way of limitation, the existence of existing service laterals, appurtenances or other types of utilities, indicated by the presence of an underground transmission main or other visible facilities, such as buildings, new asphalt, meters and junction boxes, on or adjacent to the Site).

2.1.C Prior to submitting its Bid, Contractor must correlate its experience, knowledge, and the results of its required investigation with the terms and conditions of the Contract Documents and must give SMART prompt written notice of all conflicts, errors, ambiguities, or discrepancies of any type, that it may discover in or among the Contract Documents, as-built drawings (if any) and/or actual conditions. Contractor shall give this notice during the Bid period and submission of a Bid indicates Contractor's agreement that SMART responded to the notice through Addenda issued by SMART which is acceptable to Contractor.

2.1.D Prior to submitting its Bid, Contractor must consider fully the fact that information supplied regarding existing Underground Facilities at or contiguous to the Site is in many cases based on information furnished to SMART by others (e.g., the builders of such Underground Facilities or others), and that due to their age or their chain of custody since preparation, may not meet current industry standards for accuracy. Contractor must also consider local underground

conditions and typical practices for Underground Facilities, either through its own direct knowledge or through its subcontractors, and fully consider this knowledge in assessing the existing information and the reasonableness of its reliance.

2.1.E Prior to submitting its Bid, as required, Contractor shall conduct (or request that SMART have conducted) any such additional or supplementary examinations, investigations, explorations, tests, studies and data concerning conditions (surface, subsurface, and Underground Facilities) at or contiguous to the Site or otherwise, which may affect cost, progress, performance or furnishing of Work or which relate to any aspect of the means, methods, techniques, sequences or procedures of construction to be employed by Contractor and safety precautions and programs incident thereto or which Contractor deems necessary to determine its Bid for performing and furnishing the Work in accordance with the time, price and other terms and conditions of Contract Documents.

2.1.F Prior to submitting its Bid, Contractor may rely on SMART supplied information regarding existing conditions only where such conditions are underground and not subject to reasonable verification. If existing information supplied by SMART indicates a discrepancy or a substantial risk of inaccuracy or omission, then Contractor must request specific additional information.

2.1.G Contractor shall advise SMART in writing during the Bid period of any questions, suppositions, inferences, or deductions Contractor may have, for SMART's review and response by Addenda, and may not assert any such matters later that were not brought forth during the Bid period.

2.1.H During performance of the Contract, Contractor will be charged with knowledge of all information that it should have learned in performing this required pre-Bid investigation and shall not be entitled to change orders (time or compensation) due to information or conditions that Contractor should have known as a part of this pre-Bid investigation.

2.2 Supplied Information on Underground Existing Conditions

2.2.A Regarding Underground Facilities shown in the Contract Documents or supplied in the bidding documents, SMART has compiled this information in good faith, relying on its records and third-party records. Because of the nature and location of SMART and the Project, the existence of Underground Facilities is deemed inherent in the Work of the Contract, as is the fact that Underground Facilities are not always accurately shown or completely shown on as-built records, both as to their depth and location. In Article 14 of this Document 00 70 00, this Contract establishes a heightened standard for claims involving Underground Facilities. Contractor shall consider this fact in its bidding and in its planning and execution of the Work involving Underground Facilities.

2.2.B Regarding subsurface conditions other than Underground Facilities, shown on the Contract Documents or supplied in the bidding documents, Contractor may rely only upon the general accuracy of actual reported depths, actual reported character of materials, actual reported soil types, actual reported water conditions, or actual obstructions shown or indicated in the Contract Documents. SMART is not responsible for the completeness of any subsurface condition

information for bidding or construction, Contractor's conclusions or opinions drawn from any subsurface condition information, or subsurface conditions that are not specifically shown. (For example, SMART is not responsible for soil conditions in areas contiguous to areas where a subsurface condition is shown.)

2.3 Supplied Information on Above-Ground Existing Conditions

2.3.A Regarding aboveground and as-built conditions shown on the Contract Documents or supplied in the bidding documents, such information has been compiled in good faith, however, Contractor must independently verify such information. SMART does not expressly or impliedly warrant or represent that information as to aboveground conditions or as-built conditions indicated, is correctly shown or indicated, or otherwise complete for construction purposes.

2.3.B As a condition to bidding, Contractor shall verify by independent investigation all such aboveground and as-built conditions, and bring any discrepancies to SMART's attention through written question. In submitting its Bid, Contractor shall rely on the results of its own independent investigation and shall not rely on SMART-supplied information regarding aboveground conditions and as-built conditions, and Contractor shall accept full responsibility for its verification work sufficient to complete the Work as intended.

2.4 Subcontractors

2.4.A Consistent with Public Contract Code Sections 4101 et seq., Contractor shall not substitute any other person or firm in place of any Subcontractor listed in the Bid. Subcontractors shall not assign or transfer their subcontracts or permit them to be performed by any other contractor without SMART's written approval. At SMART's request, Contractor shall provide SMART with a complete copy of all executed subcontracts or final commercial agreements with Subcontractors and/or suppliers.

2.4.B Subcontract agreements shall preserve and protect the rights of SMART under the Contract Documents so that subcontracting will not prejudice such rights. To the extent of the Work to be performed by a Subcontractor, Contractor shall require the Subcontractor's written agreement (1) to be bound to the terms of Contract Documents and (2) to assume vis-à-vis Contractor all the obligations and responsibilities that Contractor assumes toward SMART under the Contract Documents. (These agreements include for example, and not by way of limitation, all warranties, claims procedures and rules governing submittals of all types to which Contractor is subject under the Contract Documents.)

2.4.C Contractor shall provide for the assignment to SMART of all rights any Subcontractor may have against any manufacturer, supplier, or distributor for breach of warranties and guarantees relating to the Work performed by the Subcontractor under the Contract Documents.

2.4.D SMART shall be deemed to be an intended third-party beneficiary of all Subcontracts (of any tier) for the provision of labor, services, supplies or material to the Project, and each such agreement shall so provide.

3 CONTRACT AWARD AND COMMENCEMENT OF THE WORK

3.1 Time Allowances for Performance of Contract Documents

3.1.A SMART will make the Award of Contract by issuing a Notice of Award. As a condition to SMART signing Document 00 52 00 (Agreement), however, Contractor shall deliver to SMART the executed agreements, forms, bonds, and insurance documents required by the bidding documents in the required quantities and within the required times.

3.1.B The Contract Time will commence to run on the date indicated in the Notice to Proceed (Commencement Date). The Notice to Proceed will be specified as NTP.

3.1.C The total number of Days for completion of the Work shall be as described in the bid solicitation documents.

3.1.D Contract Time commences on the date established in Notice to Proceed. SMART reserves the right to modify or alter the Commencement Date of the Work. SMART may give a Notice to Proceed at any time within 60 Days after the Notice of Award. Contractor shall not do any Work at the Site prior to the date on which the Contract Time commences to run.

3.2 Commencement Of Work

3.2.A Contractor shall commence work on the Site on the Commencement Date issued in NTP. Contractor shall not do any Work at the Site prior to that date.

4 INDEMNIFICATION

4.1 Indemnification

4.1.A SMART and each of its officers, employees, consultants and agents including, but not limited to the Board, Architect, Engineer and each SMART's Representative, shall not be liable or accountable in any manner for loss or damage that may happen to any part of the Work; loss or damage to materials or other things used or employed in performing the Work; injury, sickness, disease, or death of any person; or damage to property resulting from any cause whatsoever except their sole negligence, willful misconduct or active negligence, attributable to performance or character of the Work, and Contractor releases all of the foregoing persons and entities from any and all such claims.

4.1.B To the furthest extent permitted by law (including without limitation California Civil Code Section 2782), Contractor shall assume defense of, and indemnify and hold harmless, SMART and each of its officers, employees, consultants and agents, including but not limited to the Board, Architect, Engineer and each SMART's Representative, from claims, suits, actions, losses and liability of every kind, nature and description, including but not limited to claims and fines of regulatory agencies and attorney's fees and consultant's fees, directly or indirectly arising out of, connected with or resulting from performance of the Work, failure to perform the Work, or condition of the Work which is caused in whole or part by any act or omission of Contractor, Subcontractors, anyone directly or indirectly employed by any of them or anyone for whose acts any of them may be liable, regardless of whether it is caused in part by the negligence of SMART or by any person or entity required to be indemnified hereunder.

4.1.C With respect to third-party claims against Contractor, Contractor waives any and all rights to any type of express or implied indemnity against SMART and each of its officers, employees, consultants, and agents including, but not limited to SMART, the Board, Architect, Engineer and each SMART's Representative.

4.1.D Approval or purchase of any insurance contracts or policies shall in no way relieve from liability nor limit the liability of Contractor, its Subcontractors of any tier, or the officers or agents of any of them.

4.1.E To the furthest extent permitted by law (including, without limitation, Civil Code Section 2782), the indemnities, releases of liability and limitations of liability, claims procedures, and limitations of remedy expressed throughout Contract Documents shall apply even in the event of breach of Contract, negligence (active or passive), fault or strict liability of the party(ies) indemnified, released, or limited in liability, and shall survive the termination, rescission, breach, abandonment, or completion of the Work or the terms of the Contract Documents. If Contractor fails to perform any of these defense or indemnity obligations, SMART may in its discretion back charge Contractor for SMART's costs and damages resulting therefrom and withhold such sums from progress payments or other Contract moneys which may become due.

4.1.F The indemnities in the Contract Documents shall not apply to any indemnified party to the extent of its sole negligence or willful misconduct; nor shall they apply to SMART or other indemnified party to the extent of its active negligence.

4.1.G Contractor's obligations under this paragraph 4.1 shall survive completion of the Work or termination of the Contract Documents for any reason whatsoever.

5 DRAWINGS AND SPECIFICATIONS

5.1 Intent

5.1.A Drawings and Specifications are intended to describe a functionally complete and operable Project (and all parts thereof) to be constructed in accordance with the requirements of Contract Documents. Contractor shall perform any work, provide services and furnish any materials or equipment that may reasonably be inferred from the requirements of Contract Documents or from prevailing custom or trade usage as being required to produce this intended result. Contractor shall interpret words or phrases used to describe Work (including services), materials, or equipment that have well-known technical or construction industry or trade meaning in accordance with that meaning. Drawings' intent specifically includes the intent to depict construction that complies with all applicable laws, codes, and standards.

5.1.B As part of the "Work," Contractor shall provide all labor, materials, equipment, machinery, tools, facilities, services, employee training and testing, hoisting facilities, Shop Drawings, storage, testing, security, transportation, disposal, the securing of all necessary or required field dimensions, the cutting or patching of existing materials, notices, permits, documents, reports, agreements and any other items required or necessary to timely and fully complete Work described

and the results intended by Contract Documents and, in particular, Drawings and Specifications. Divisions and Specification Sections and the identification on any Drawings shall not control Contractor in dividing Work among Subcontractors or suppliers or delineating the Work to be performed by any specific trade.

5.1.C Contractor shall perform reasonably implied parts of Work as "incidental work" although absent from Drawings and Specifications. Incidental work includes any work not shown on Drawings or described in Specifications that is necessary or normally or customarily required as a part of the Work shown on Drawings or described in Specifications. Incidental work includes any work necessary or required to make each installation satisfactory, legally operable, functional, and consistent with the intent of Drawings and Specifications or the requirements of Contract Documents including required tasks to be performed under Division 1 of Specifications. Contractor shall perform incidental work without extra cost to SMART. Incidental work shall be treated as if fully described in Specifications and shown on Drawings, and the expense of incidental work shall be included in price Bid and Contract Sum.

5.2 Drawing Details

5.2.A A typical or representative detail on Drawings shall constitute the standard for workmanship and material throughout corresponding parts of Work. Where necessary, and where reasonably inferable from Drawings, Contractor shall adapt such representative detail for application to such corresponding parts of Work. The details of such adaptation shall be subject to prior approval by SMART. Repetitive features shown in outline on Drawings shall be in exact accordance with corresponding features completely shown.

5.3 Interpretation Of Drawings And Specifications

5.3.A Should any discrepancy appear, or any misunderstanding arise as to the import of anything contained in Drawings and Specifications, or should Contractor have any questions or requests relating to Drawings or Specifications, Contractor shall refer the matter to SMART, in writing, in accordance with Section 01 25 00 (Clarification and Modification Procedures). SMART will issue with reasonable promptness written responses, clarifications or interpretations as SMART may determine necessary, which shall be consistent with the intent of and be reasonably inferable from Contract Documents. Such written clarifications or interpretations shall be binding upon Contractor. If Contractor believes that a written response, clarification, or interpretation justifies an adjustment in the Contract Sum or Contract Time, Contractor shall give SMART prompt written notice as provided in Section 01 25 00 (Clarification and Modification Procedures). If the parties are unable to agree to the amount or extent of the adjustment, if any, then Contractor shall perform the Work in conformance with SMART's response, clarification, or interpretation and may make a written claim for the adjustment as provided in Article 12 of this Document 00 70 00.

5.4 Checking Of Drawings

5.4.A Before undertaking each part of Work, Contractor shall carefully study and compare Contract Documents and check and verify pertinent information shown in the Contract Documents and all applicable field conditions and measurements. Contractor shall be responsible for any errors that might have been avoided by such comparison. Contractor shall promptly report to SMART, in writing, any conflict, error, ambiguity or discrepancy that Contractor may discover. Contractor shall obtain a written interpretation or clarification from SMART before proceeding with any Work affected thereby. Dimensions shown on Drawings shall be followed; Contractor shall not scale Drawings.

5.5 Standards To Apply Where Specifications Are Not Furnished

5.5.A The following general specifications shall apply wherever in the Specifications, or in any directions given by SMART in accordance with or supplementing Specifications, it is provided that Contractor shall furnish materials or manufactured articles or shall do Work for which no detailed specifications are shown. Materials or manufactured articles shall be of the best grade, in quality and workmanship, obtainable in the market from firms of established good reputation. If not ordinarily carried in stock, the materials or manufactured articles shall conform to industry standards for first class materials or articles of the kind required, with due consideration of the use to which they are to be put. Work shall conform to the usual standards or codes, such as those cited in Section 01 42 19 (References and Definitions), for first class work of the kind required. Contractor shall specify in writing to SMART the materials to be used or Work to be performed under this paragraph 5.5 fourteen (14) Days prior to furnishing such materials or performing such Work.

5.6 Deviation from Specifications and Drawings

5.6.A Contractor shall perform Work in accordance with Drawings and Specifications. Contractor shall not deviate from Drawings, or the dimensions given in the Drawings or the Specifications without SMART's advance written approval of the proposed deviation.

5.6.B If SMART elects to change the Work, all changes in the Contract Documents will be made as set forth in Article 14 of this Document 00 70 00.

5.7 Ownership And Use Of Drawings, Specifications And Contract Documents

5.7.A Drawings, Specifications, and other Contract Documents were prepared for use for Work of Contract Documents only. No part of Contract Documents shall be used for any other construction or for any other purpose except with the written consent of SMART. Any unauthorized use of Contract Documents is prohibited and at the sole liability of the user.

6 CONSTRUCTION BY SMART OR BY SEPARATE CONTRACTORS

6.1 SMART's Right To Perform Construction And To Award Separate Contracts

6.1.A SMART may perform, with its own forces, construction or operations related to the Project. SMART may also award separate contracts in connection with other portions of the Project or other construction or operations, on the Site or areas contiguous to the Site, under conditions similar to these Contract Documents, or may have utility owners perform other work. When separate contracts are awarded for different portions of the Project or other construction or operations on the Site, the term "Contractor" in these Contract Documents shall mean the Contractor herein.

6.2 Mutual Responsibility

6.2.A Contractor shall afford all other contractors, utility owners, and SMART (if SMART is performing work with its own forces), proper and safe access to the Site, and reasonable opportunity for the installation and storage of their materials. Contractor shall ensure that the execution of its Work properly connects and coordinates with others' work and shall cooperate with them to facilitate the progress of the Work.

6.2.B Contractor shall coordinate its Work with the work of other contractors, SMART, local jurisdiction, County, and utility owners. Contractor shall hold coordination meetings with other contractors, SMART and its representatives, and utility owners as required by Section 01 31 19 (Project Meetings).

6.2.C Unless otherwise provided in the Contract Documents, Contractor shall do all cutting, fitting, and patching of the Work that may be required to make its several parts come together properly and integrate with such other work. Contractor shall not endanger any work of other contractors, SMART or utility owners by cutting, excavating, or otherwise altering the work of others and will only cut or alter the work of others with the written consent of SMART and the others whose work will be affected.

6.2.D Contractor's duties and responsibilities under paragraph 6.2.A of this Document 00 70 00 are for the benefit of SMART and also for the benefit of such other contractors and utility owners working at the Site to the extent that there are comparable provisions for the benefit of Contractor in the direct contracts between SMART and such other contractors and utility owners.

6.2.E To the extent that any part of Contractor's Work is to interface with work performed or installed by other contractors, SMART, or utility owners, Contractor shall inspect and measure the in-place work. Contractor shall promptly report to SMART in writing any defect in in-place work that will impede or increase the cost of Contractor's interface unless corrected. SMART will require the entity responsible for the Defective Work to make corrections so as to conform to its contract requirements, or, if the defect is the result of an error or omission in the Contract Documents, issue a Change Order. If Contractor fails to measure, inspect and/or report to SMART in writing defects that are reasonably discoverable, Contractor shall bear all costs of accomplishing the interface acceptable to SMART. This provision shall be included in any and all other

contracts or subcontracts for Work to be performed where such a conflict could exist.

6.3 SMART's Authority Over Coordination

6.3.A SMART will have authority over coordination of the activities of multiple contractors in cases where SMART performs work with its own forces or contracts with others for the performance of other work on the Project, or utilities work on the Site. SMART may at any time and in its sole discretion, designate a person or entity other than SMART to have authority over the coordination of the activities among the various contractors. SMART's authority with respect to coordination of the activities of multiple contractors and utility owners shall not relieve Contractor of its obligation to other contractors and utility owners to coordinate its Work with other contractors and utility owners as specified in paragraph 6.2 of this Document 00 70 00. Contractor shall promptly notify SMART in writing when another contractor on the Project fails to coordinate its work with the Work of Contract Documents.

6.3.B Contractor shall suspend any part of the Work or carry on the same in such manner as directed by SMART when such suspension or prosecution is necessary to facilitate the work of other contractors or workers. No damages or claims by Contractor will be allowed if the suspension or Work change is due in whole or in part to Contractor's failure to perform its obligation to coordinate its Work with other contractors, SMART, and utility owners. Damages or claims will be allowed only to the extent of fault by SMART if the suspension or Work change is due in whole or in part to another contractor's failure to coordinate its work with Contractor, other contractors, SMART, local jurisdictions, County, and utility owners. SMART reserves the right to back charge Contractor for any damages or claims incurred by other contractors as a result of Contractor's failure to perform its obligations to coordinate with other contractors, SMART, and utility owners. SMART may deposit the funds retained with a Court of competent jurisdiction pursuant to applicable interpleader procedures and Contractor releases SMART of further liability regarding such funds.

7 PAYMENT BY SMART

7.1 Receipt And Processing Of Applications For Payment

7.1.A As required by Section 01 20 00 (Price and Payment Procedures), Contractor shall prepare the schedules, submit Applications for Payment, and warrant title to all Work covered by each Application for Payment. SMART will review Contractor's Applications for Payment and make payment thereon, and Contractor shall make payments to Subcontractors, suppliers, and others, as required by Section 01 20 00 (Price and Payment Procedures).

8 CONTROL OF THE WORK

8.1 Subcontractors

8.1.A Contractor is fully responsible for Contractor's own acts and omissions. Contractor is responsible for all acts and omissions of its Subcontractors, suppliers, and other persons and organizations performing or furnishing any of the Work, labor, materials, or equipment under a direct or indirect contract with Contractor. The Contractor may not assign any portion, or any rights hereunder, of the Contract Documents without the SMART's express written consent or, where applicable, compliance with the Subcontractor Listing Law.

8.2 Supervision Of Work By Contractor

8.2.A Contractor shall supervise, inspect, and direct Work competently and efficiently, devoting the attention and applying such personal skills and expertise as may be required and necessary to perform Work in accordance with Contract Documents. Contractor shall be solely responsible for and have control and charge of construction means, methods, techniques, sequences and procedures, safety precautions and programs in connection with the Work. Contractor shall be responsible to see that the completed Work complies accurately with Contract Documents.

8.2.B Contractor shall keep on the Site at all times during Work progress a competent resident Superintendent in conformance with paragraph 10.3.A.

8.3 Observation Of Work By SMART

8.3.A SMART's Representatives: SMART's Representative(s) will have limited authority to act on behalf of SMART as set forth in the Contract Documents. Except as otherwise provided in these Contract Documents or subsequently identified in writing by SMART, SMART will issue all communications to Contractor through SMART's Representative, and Contractor shall issue all communications to SMART through SMART's Representative in a written document delivered to SMART. Should any direct communications between Contractor and SMART's consultants, architects or engineers not identified in Article 2 of Document 00 52 00 (Agreement) occur during field visits or by telephone, Contractor shall immediately confirm them in a written document copied to SMART's Representative.

8.3.B Means and methods of Construction: Subject to those rights specifically reserved in the Contract Documents, SMART will not supervise, or direct, or have control over, or be responsible for, Contractor's means, methods, techniques, sequences or procedures of construction, or the safety precautions and programs incident thereto, or Contractor's failure to comply with laws and regulations applicable to the furnishing or performance of Work. SMART will not be responsible for Contractor's failure to perform or furnish the Work in accordance with Contract Documents.

8.3.C In exercising its responsibilities and authorities under the Contract Documents, SMART does not assume any duties or responsibilities to any Subcontractor or supplier and does not assume any duty of care to Contractor, Contractor's

Subcontractors, or suppliers. Except as expressly set forth in the Contract Documents, in exercising their respective responsibilities and authorities under the Contract Documents, neither Architect, Engineer nor any SMART's Representative assumes any duties or responsibilities to any Subcontractor, sub-Subcontractor or supplier nor assumes any duty of care to Contractor or any Subcontractor, sub-Subcontractor or suppliers.

8.3.D Work shall be performed under SMART's general observation and administration. Contractor shall comply with SMART's directions and instructions in accordance with the terms of Contract Documents, but nothing contained in these General Conditions shall be taken to relieve Contractor of any obligations or liabilities under the Contract Documents. SMART's failure to review or, upon review, failure to object to any aspect of Work reviewed, shall not be deemed a waiver or approval of any non-conforming aspect of Work.

8.3.E SMART may engage an independent consultant or architect (collectively for purposes of this paragraph 8.3, "Consultant") to assist in administering the Work. If so engaged, Consultant will advise and consult with SMART, but will have authority to act on behalf of SMART only to extent provided in the Contract Documents or as set forth in writing by SMART. Consultant will not be responsible for and will not have control or charge of construction means, methods, techniques, sequences or procedures, or for safety precautions and programs in connection with Work. Consultant will not be responsible for or have control over the acts or omissions of Contractor, Subcontractors or their agents or employees, or any other persons performing Work.

8.3.F Consultant may review Contractor's Submittals, such as Shop Drawings, Product Data, and Samples, but only for conformance with design concept of Work and with information given in the Contract Documents.

8.3.G SMART's Consultant and/or representative may visit the Site at intervals appropriate to stage of construction to become familiar generally with the progress and quality of Work and to determine in general if Work is proceeding in accordance with Contract Documents. Based on its observations, SMART's Consultant and/or representative may recommend that it disapprove or reject Work that SMART's Consultant and/or representative believes to be defective or will not produce a complete Project that conforms to Contract Documents or will prejudice the integrity of the design concept of the completed Project as a functioning whole as indicated by Contract Documents. SMART will also have authority to require special inspection or testing of Work, whether or not the Work is fabricated, installed, or completed.

8.3.H SMART's Consultant and/or representative may conduct inspections to recommend to SMART the dates that Contractor has achieved Substantial Completion and when the Final Inspection Report can be issued, and will receive and forward to SMART for review written warranties and related documents required by Contract Documents.

8.4 Access To Work

8.4.A During performance of Work, SMART and its agents, consultants, and employees may at any time enter upon Work, shops, or studios where any part of the Work may be in preparation, or factories where any materials for use in Work are being or are to be manufactured, and Contractor shall provide proper and safe facilities for this purpose and shall make arrangements with manufacturers to facilitate inspection of their processes and products to such extent as SMART's interests may require. Other contractors, SMART workers or utility owners performing work for SMART may also enter upon Work for all purposes required by their respective contracts. Subject to the rights reserved in the Contract Documents, Contractor shall have sole care, custody, and control of the Site and its Work areas.

8.4.B SMART may, at any time, and from time to time, during the performance of the Work, enter the Work Site for the for the purpose of installing any necessary work by SMART labor or other contracts, and for any other purpose in connection with the installation of facilities. In doing so, SMART shall endeavor not to interfere with Contractor and Contractor shall not interfere with other work being done by or on behalf of SMART.

8.4.C If, prior to completion and final acceptance of all the Work, SMART takes possession of any structure or facility (whether completed or otherwise) comprising a portion of the Work with the intent to retain possession thereof (as distinguished from temporary possession contemplating return to Contractor), then, while SMART is in possession of the same, Contractor shall be relieved of liability for loss or damage to such structure other than that resulting from Contractor's fault or negligence. Such taking of possession by SMART shall not relieve Contractor from any provisions of the Contract respecting such structure, other than to the extent specified in the preceding sentence, nor constitute a final acceptance of such structure or facility. See also Section 01 11 00 (Summary).

8.4.D If, following installation of any equipment or facilities furnished by Contractor, defects requiring correction by Contractor are found, SMART shall have the right to operate such unsatisfactory equipment or facilities and make reasonable use thereof until the equipment or facilities can be shut down for correction of defects without injury to SMART.

9 <u>WARRANTY, GUARANTY, AND INSPECTION OF WORK</u>

9.1 Warranty And Guaranty

9.1.A General Representations and Warranties: Contractor represents and warrants that it is and will be at all times fully qualified and capable of performing every Phase of the Work and completing Work in accordance with the terms of Contract Documents. Contractor warrants that all construction services shall be performed in accordance with generally accepted professional standards of good and sound construction practices and all requirements of Contract Documents. Contractor warrants that Work, including but not limited to each item of materials and equipment incorporated therein, shall be new, of suitable grade of

its respective kind for its intended use, and free from defects in design, architecture and/or engineering, materials, construction and workmanship. Contractor warrants that Work shall conform in all respects with all applicable requirements of federal, state and local laws, applicable construction codes and standards, licenses and permits, Drawings and Specifications and all descriptions set forth therein, and all other requirements of Contract Documents. Contractor shall not be responsible, however, for the negligence of others in the specification of specific equipment, materials, design parameters and means or methods of construction where that is specifically shown and expressly required by Contract Documents.

9.1.B Extended Guarantees: Any guaranty exceeding one year provided by the supplier or manufacturer of any equipment or materials used in the Project shall be extended for such term. Contractor expressly agrees to act as co-guarantor of such equipment and materials and shall supply SMART with all warranty and guaranty documents relative to equipment and materials incorporated in the Project and guaranteed by their suppliers or manufacturers.

9.1.C Environmental and Toxics Warranty: The covenants, warranties and representations contained in this paragraph 9.1.C. are effective continuously during Contractor's Work on the Project and following cessation of labor for any reason including, but not limited to, Project completion. Contractor covenants, warrants, and represents to SMART that:

9.1.C.1 To Contractor's knowledge after due inquiry, no lead or Asbestos-containing materials were installed or discovered in the Project at any time during Contractor's construction thereof. If any lead or Asbestos-containing materials were discovered, Contractor made immediate written disclosure to SMART.

9.1.C.2 To Contractor's knowledge after due inquiry, no electrical transformers, light fixtures with ballasts or other equipment containing PCBs are or were located on the Project at any time during Contractor's construction thereof.

9.1.C.3 To Contractor's knowledge after due inquiry, no storage tanks for gasoline or any other toxic substance are or were located on the Project at any time during Contractor's construction thereof. If any such materials were discovered, Contractor made immediate written disclosure to SMART.

9.1.C.4 Contractor's operations concerning the Project are and were not in violation of any applicable environmental federal, state, or local statute, law or regulation dealing with hazardous materials substances or toxic substances and no notice from any governmental body has been served upon Contractor claiming any violation of any such law, ordinance, code or regulation, or requiring or calling attention to the need for any Work, repairs, construction, alteration, or installation on or in connection with the Project in order to comply with any such laws, ordinances, codes, or regulations, with which Contractor has not complied. If there are any

such notices with which Contractor has complied, Contractor shall provide SMART with copies thereof.

9.2 Inspection Of Work

9.2.A All materials, equipment, and workmanship used in Work shall be subject to inspection and testing at all times during construction and/or manufacture in accordance with the terms of Contract Documents. Work and materials, and manufacture and preparation of materials, from beginning of construction until Final Completion and acceptance of Work, shall be subject to inspection and rejection by SMART, its agents, representatives, or independent contractors retained by SMART to perform inspection services, or governmental agencies with jurisdictional interests. Contractor shall provide them proper and safe conditions for such access and advise them of Contractor's Site safety procedures and program so that they may comply therewith as applicable. Upon request or where specified, SMART shall be afforded access for inspection at the source of supply, manufacture, or assembly of any item of material or equipment, with reasonable accommodations supplied for making such inspections.

9.2.B Contractor shall give SMART timely notice of readiness of Work for all required inspections, tests, or approvals, and shall cooperate with inspection and testing personnel to facilitate required inspections or tests. Contractor shall also coordinate, schedule, and give adequate notice to the appropriate inspection personnel of any Work that can only be inspected as it is placed or assembled (for example, concrete or masonry work), to enable the constant presence of such inspection personnel during such Work.

9.2.C If applicable laws or regulations of any public body having jurisdiction require any Work (or part thereof) specifically to be inspected, tested or approved by an employee or other representative of such public body, Contractor shall assume full responsibility for arranging and obtaining such inspections, tests or approvals, and furnish SMART with the required certificates of inspection, or approval. SMART will pay the cost of initial testing and Contractor shall pay all costs in connection with any follow-up or additional testing. Contractor shall also be responsible for arranging and obtaining and shall pay all costs in connection with any inspections, tests or approvals required for the acceptance of materials or equipment to be incorporated in the Work, or of materials, mix designs, or equipment submitted for approval prior to Contractor's purchase thereof for incorporation in the Work. Additionally, in the event that a scheduled inspection is canceled in less than 24 hours' notice by Contractor and SMART incurs costs associated with the cancellation, Contractor will reimburse SMART for the actual costs of the canceled inspections. The amount will be deducted from payment owed Contractor.

9.2.D If Contractor covers any Work, or the work of others, prior to any required inspection, test or approval without written approval of SMART, Contractor shall uncover the Work at SMART's request. Contractor shall bear the expense of uncovering Work and replacing Work.

9.2.E In any case where Contractor covers Work contrary to SMART's request, Contractor shall uncover Work for SMART's observation or inspection at SMART's request. Contractor shall bear the cost of uncovering and re-covering the Work.

9.2.F Whenever required by SMART, Contractor shall furnish tools, labor, and materials necessary to make examination of Work that may be completed or in progress, even to extent of uncovering or taking down portions of finished Work. Should Work be found unsatisfactory, cost of making examination and of reconstruction shall be borne by Contractor. If Work is found to be satisfactory, SMART, in manner herein prescribed for paying for alterations, Modifications, and extra Work, except as otherwise herein specified, will pay for examination.

9.2.G Inspection of the Work by or on behalf of SMART, or SMART's failure to do so, shall not under any circumstances be deemed a waiver or approval of any non-conforming aspect of the Work. Contractor shall have an absolute duty, in the absence of a written Change Order signed by SMART, to perform Work in conformance with the Contract Documents.

9.2.H Any inspection, evaluation, or test performed by or on behalf of SMART relating to the Work is solely for the benefit of SMART and shall not be relied upon by Contractor. Contractor shall not be relieved of the obligation to perform Work in accordance with the Contract Documents, nor relieved of any guaranty, warranty, or other obligation, as a result of any inspections, evaluations, or tests performed by SMART, whether or not such inspections, evaluations, or tests are permitted or required under the Contract Documents. Contractor shall be solely responsible for testing and inspecting Work already performed to determine whether such Work is in proper condition to receive later Work.

9.3 Correction Of Defective Work

9.3.A If Contractor fails to supply sufficient skilled workers, suitable materials or equipment, or to furnish or perform the Work in such a way that the completed Work will conform to Contract Documents, SMART may order Contractor to replace any Defective Work, or stop any portion of Work to permit SMART (at Contractor's expense) to replace such Defective Work. These SMART rights are entirely discretionary on the part of the SMART and shall not give rise to any duty on the part of SMART to exercise the rights for the benefit of Contractor or any other party.

9.3.B SMART may direct Contractor to correct any Defective Work or remove it from the Site and replace it with Work that is not Defective and satisfactorily correct or remove and replace any damage to other Work or the work of others resulting from the correction or removal. Contractor shall be responsible for any and all claims, costs, losses and damages caused by or resulting from such correction or removal. When necessary, a deductive Change Order will be issued incorporating the necessary revisions in the Contract Documents with respect to the Work and the Contract Sum. If the parties are unable to agree to the amount of an appropriate decrease in the Contract Sum, SMART may decide the proper amount

or, in its discretion may elect to leave the Contract Sum unchanged and deduct from moneys due Contractor, all such claims, costs, losses and damaged caused by or resulting from the correction or removal. If Contractor disagrees with SMART's calculations, it may make a claim as provided in Article 12 of this Document 00 70 00. SMART's rights under this paragraph 9.3.B shall be entirely discretionary and, like all other SMART rights and remedies under the Contract, in addition to any other rights it may have under the Contract Documents or by law.

9.3.C Correction Period:

9.3.C.1 With respect to equipment and machinery supplied by Contractor and incorporated into the Work, if within one year after the date of Substantial Completion of the portion of the Work incorporating the equipment and/or machinery (or, to the extent expressed by Change Order or Certificate of Substantial Completion, one year after SMART's written acceptance of such equipment), or such longer period of time as may be prescribed by laws or regulations, or by the terms of Contract Documents (including extended warranties), any equipment or machinery is found to be Defective, Contractor shall promptly, without cost to SMART and in accordance with SMART's written instructions, correct such Defective Work.

9.3.C.2 With respect to structures within the Scope of Work, if within one year after the date of Substantial Completion of the Work, or such longer period of time as may be prescribed by laws or regulations, or by the terms of Contract Documents, any Work is found to be defective, Contractor shall promptly, without cost to SMART and in accordance with SMART's written instructions, correct such Defective Work.

9.3.D Contractor shall remove any Defective Work rejected by SMART and replace it with Work that is not Defective, and satisfactorily correct or remove and replace any damage to other Work or the work of others resulting therefrom. If Contractor fails to promptly comply with the terms of such instructions, or in an emergency where delay would cause serious risk of loss or damage, SMART may have the Defective Work corrected or the rejected Work removed and replaced.

9.3.E Contractor shall pay for all claims, costs, losses, and damages caused by or resulting from such removal and replacement. Where Contractor fails to correct Defective Work, or defects are discovered outside the correction period, SMART shall have all rights and remedies granted by law.

9.3.F Additionally, in special circumstances where a part of the Work is occupied or a particular item of equipment is placed in continuous service before Substantial Completion of all the Work, the correction period for that part of Work or that item may start to run from an earlier date if so, provided by Change Order or Certificate of Substantial Completion.

9.3.G Where Defective Work or rejected Work (and damage to other Work resulting therefrom) has been corrected, removed, or replaced under this provision after the commencement of the correction period, the correction period hereunder

with respect to such Work shall be extended for an additional period of one year after such correction or removal and replacement has been satisfactorily completed.

9.3.H If following installation of any Work furnished by Contractor, defects requiring correction by Contractor are found, SMART shall have the right to operate such Work and make reasonable use thereof until it can be shut down for correction of defects without causing injury to SMART.

9.4 Acceptance And Correction Of Defective Work By SMART

9.4.A SMART may accept Defective Work. Contractor shall pay all claims, costs, losses, and damages (including but not limited to staff and Consultant time) attributable to SMART's evaluation of and determination to accept such Defective Work. If SMART accepts any Defective Work prior to final payment, a Change Order will be issued incorporating the necessary revisions in the Contract Documents with respect to the Work and the Contract Sum. If the parties are unable to agree to the amount of an appropriate decrease in the Contract Sum, SMART may deduct from moneys due Contractor, all claims, costs, losses, damages, expenses, and liabilities attributable to the Defective Work. If Contractor disagrees with SMART's calculations, Contractor may make a claim as provided in Article 12 of this Document 00 70 00. If SMART accepts any Defective Work after final payment, Contractor shall pay to SMART, an appropriate amount as determined by SMART.

9.4.B SMART may correct and remedy deficiency if, after five Days' written notice to Contractor, Contractor fails to correct Defective Work or to remove and replace rejected Work in accordance with paragraph 9.3.B of this Document 00 70 00; or provide a plan for correction of Defective Work acceptable to SMART; or perform Work in accordance with Contract Documents. In connection with such corrective and remedial action, SMART may exclude Contractor from all or part of the Site; take possession of all or part of Work and suspend Contractor's Work related thereto; take possession of all or part of Contractor's tools, appliances, construction equipment and machinery at the Site; and incorporate in Work any materials and equipment stored at the Site or for which SMART has paid Contractor but which are stored elsewhere. Contractor shall allow SMART, its representatives, agents, employees, and other contractors and Architect's consultants' access to the Site to enable SMART to exercise the rights and remedies under this paragraph 9.4.B. Contractor shall be responsible for all claims, costs, losses, damages, expenses, and liabilities incurred or sustained by SMART in exercising such rights and remedies. A Change Order will be issued incorporating the necessary revisions in the Contract Documents with respect to Work and the Contract Sum. If the parties are unable to agree to the amount of an appropriate decrease in the Contract Sum, SMART may deduct from moneys due Contractor, all claims, costs, losses, and damages caused by or resulting from the correction or removal. If Contractor disagrees with SMART's calculations, Contractor may make a claim as provided in Article 12 of this Document 00 70 00.

9.5 Rights Upon Inspection or Correction

9.5.A Contractor shall not be allowed an extension of Contract Time because of any delay in the performance of Work attributable to the exercise by SMART of its rights and remedies under this Article 9. Where SMART exercises its rights under this Article 9, it retains all other rights it has by law or under the Contract Documents including, but not limited to, the right to terminate for default Contractor's right to proceed with the Work under the Contract Documents and/or make a claim or back charge where a Change Order cannot be agreed upon.

9.5.B Inspection by SMART shall not relieve Contractor of its obligation to have furnished material and workmanship in accordance with Contract Documents. Payment for Work completed through periodic progress payments or otherwise shall not operate to waive SMART's right to require full compliance with Contract Documents and shall in no way be deemed as acceptance of the Work paid, therefore. Contractor's obligation to complete the Work in accordance with Contract Documents shall be absolute unless SMART agrees otherwise in writing. Contractor shall immediately correct defective Work upon Contractor's knowledge of the defective Work, regardless of SMART's issuance of a correction notice or otherwise identifying the defective Work.

9.6 Samples and Tests Of Materials And Work

9.6.A Contractor shall furnish, in such quantities and sizes as may be required for proper examination and tests, Samples or test specimens of all materials to be used or offered for use in connection with Work. Contractor shall prepare Samples or test specimens at its expense and furnish them to SMART. Contractor shall submit all Samples in ample time to enable SMART to make any necessary tests, examinations, or analyses before the time it is desired to incorporate the material into the Work.

9.7 Proof of Compliance Of Contract Provisions

9.7.A In order that SMART may determine whether Contractor has complied or is complying with requirements of Contract Documents not readily enforceable through inspection and tests of Work and materials, Contractor shall at any time, when requested, submit to SMART properly authenticated documents or other satisfactory proofs of compliance with all applicable requirements.

9.8 Acceptance

9.8.A Inspection by SMART or its authorized agents or representatives, any order or certificate for the payment of money, any payment, acceptance of the whole or any part of Work by SMART, any extension of time, any verbal statements on behalf of SMART or its authorized agents or representatives shall not operate as a waiver or modification of any provision of the Contract Documents, or of any power reserved to SMART herein or therein or any right to damages provided in the Contract Documents. Any waiver of any breach of the Contract Documents shall not be held to be a waiver of any other subsequent breach. Upon completion

of Final Inspection and approval by SMART or its authorized agents or representatives, SMART may issue the Notice of Final Acceptance.

10 CONTRACTOR'S ORGANIZATION AND EQUIPMENT

10.1 Contractor's Legal Address

10.1.A Address and facsimile number given in Contractor's Bid are hereby designated as Contractor's legal address and facsimile number. Contractor may change its legal address and facsimile number by notice in writing, delivered to SMART, which in conspicuous language advises SMART of a change in legal address or facsimile number, and which SMART accepts in writing. Delivery of any drawings, notice, letter, or other communication to Contractor's legal address or depositing in any post office or post office box regularly maintained by the United States Postal Service, in a wrapper with postage affixed, directed to Contractor at legal address shall be deemed legal and sufficient service thereof upon Contractor. Facsimile to Contractor's designated facsimile number of any letter, memorandum, or other communication on standard or legal sized paper, with proof of facsimile transmission, shall be deemed legal and sufficient service thereof upon Contractor.

10.2 Contractor Documents At The Work Site

10.2.A Contractor shall maintain a copy of the current project plans, specifications and Contractor's markup copy (As-Built) while on site. As needed, the Contractor shall also maintain copies of project specific permits and SWPPP documentation while on site. All documents shall be available to SMART for on-site review, or for regulatory agency on site review as required in project permit conditions.

10.3 Contractor's Superintendents Or Forepersons

10.3.A Contractor shall at all times while Work is being performed at site, be represented on Site by a competent resident Superintendent authorized and competent to receive and carry out any instructions that SMART may give and shall be liable for faithful observance of instructions delivered to Contractor. Said Superintendent shall not be replaced without SMART's express written consent. The Superintendent shall be Contractor's representative at the Site and shall have complete authority to act on behalf of Contractor. All communications to and from the Superintendent shall be as binding as if given to or by Contractor. Communications, instructions, or Drawings given to Contractor's representative shall be deemed to have been given to Contractor.

10.3.B In the event that the designated Superintendent is unable to be present at the site, Contractor shall designate a substitute Superintendent, subject to SMART's approval, and shall obtain SMART's consent as to time and duration of any such substitution.

10.4 Proficiency in English

10.4.A Supervisors, security guards, safety personnel and employees who have unescorted access to the Site shall possess proficiency in the English language in order to understand, receive and carry out oral and written communications or instructions relating to their job functions, including safety and security requirements.

10.5 Contractor's and Subcontractors' Employees

10.5.A Contractor shall employ, and shall permit its Subcontractors to employ, only competent and skillful personnel to do Work. If SMART notifies Contractor that any of its employees, or any of its Subcontractors' employees on Work is incompetent, unfaithful, disorderly or profane, or fails to observe customary standards of conduct or refuses to carry out any provision of the Contract Documents, or uses harassing, threatening or abusive language at the site to any person representing SMART or to any member of the public, or violates sanitary rules, or is otherwise unsatisfactory, and if SMART requests that such person be discharged from Work, then Contractor or its Subcontractor shall immediately discharge such person from Work and the discharged person shall not be re-employed on the Work except with consent of SMART.

10.6 Contractor's Use Of The Site

10.6.A Contractor shall not make any arrangements with any person to permit occupancy or use of any land, structure or building within the limits of the Work, for any purpose whatsoever, either with or without compensation, in conflict with any agreement between SMART and any owner, former owner or tenant of such land, structure or buildings. Contractor may not occupy SMART-owned property outside the limit of the Work as indicated on the Drawings unless it obtains prior approval from SMART.

11 PROSECUTION AND PROGRESS OF THE WORK

11.1 Schedules And Examinations Of Contract Documents

11.1.A Contractor shall submit schedules, reports, and submittals in the appropriate quantity and within the required time, arrange conferences and meetings and proceed with the Work in accordance with Contract Documents, including Sections 01 31 19 (Project Meetings), 01 32 16 (Progress Schedules and Reports), and 01 33 00 (Submittal Procedures).

11.1.B Contractor shall submit to SMART for review and discussion:

11.1.B.1 At the Preconstruction Conference described in Section 01 31 19 (Project Meetings), Progress Schedules, and Reports as required by Sections 01 32 16 (Progress Schedules and Reports) and 01 33 00 (Submittal Procedures). Contractor shall utilize Progress Schedule in planning, scheduling, coordinating, performing and controlling Work (including all activities of Subcontractors, assigned contractors, equipment vendors and suppliers). Contractor shall update Progress

Schedule on a monthly basis to depict accurately the actual progress of Work and for evaluating and preparing Contractor's monthly progress payments. Contractor's failure to submit and maintain an acceptable Progress Schedule may, in SMART's discretion, and without limiting the materiality of Contractor's other obligations under the Contract Documents, constitute grounds to declare Contractor in material breach of the Contract Documents.

11.1.B.2 As required, a preliminary Schedule of Values conforming to Section 01 20 00 (Payment Procedures) paragraph 1.6.C. shall be submitted to SMART. See Section 01 20 00 (Price and Payment Procedures) for further requirements regarding the Schedule of Values.

11.1.C Unless otherwise provided in the Contract Documents, SMART will review for acceptability the schedules submitted in accordance with paragraph 11.1.B of this Document 00 70 00. Contractor shall make corrections and adjustments to complete and resubmit the schedules and shall secure SMART's written acceptance prior to submitting first payment request. Schedules shall be updated and completed as required by Sections 01 20 00 (Price and Payment Procedures), 01 32 16 (Progress Schedules and Reports) and 01 33 00 (Submittal Procedures). No progress or mobilization payment shall be due or owing to Contractor until the schedules are submitted to and acceptable to SMART as meeting the requirements of the Contract Documents, including Sections 01 20 00 (Price and Payment Procedures), 01 32 16 (Progress Schedules and Reports) and 01 33 00 (Submittal Procedures). SMART's acceptance of Contractor's schedules will not create any duty of care or impose on SMART any responsibility for the sequencing, scheduling or progress of Work nor will it interfere with or relieve Contractor from Contractor's full responsibility, therefore.

11.2 Commencement of Work Notification

11.2.A Before commencing any portion of Work, Contractor shall inform SMART in writing as to time and place at which Contractor wishes to commence Work, and nature of Work to be done, in order that proper provision for inspection of Work may occur, and to assure measurements necessary for record and payment. Information shall be given to SMART in a reasonable time in advance of time at which Contractor proposes to begin Work, so that SMART may complete necessary preliminary work without inconvenience or delay to Contractor.

11.3 Submittals

11.3.A Contractor shall submit Submittals to SMART for review in strict accordance with Section 01 33 00 (Submittal Procedures). Submission of a Submittal shall constitute Contractor's representation that all requirements of Section 01 33 00 (Submittal Procedures) have been complied with. All Submittals will be identified as SMART may require and in the number of copies specified in Section 01 33 00 (Submittal Procedures).

11.3.B Contractor shall not perform Work that requires submission of a Submittal prior to submission and favorable review of the Submittal. Where a Submittal is

required by Contract Documents or the final Schedule of Submittals (if required) accepted by SMART, any related Work performed prior to SMART's approval of the pertinent Submittal shall be at the sole expense, responsibility, and risk of Contractor.

11.4 Contractor To Supply Sufficient Workers And Materials

11.4.A Unless otherwise required by SMART under the terms of Contract Documents, Contractor shall at all times keep on the Site materials and employ qualified workers sufficient to prosecute Work at a rate and in a sequence and manner necessary to complete Work within the Contract Time. This obligation shall remain in full force and effect notwithstanding disputes or claims of any type.

11.4.B At any time during progress of Work should Contractor directly or indirectly (through Subcontractors) refuse, neglect, or be unable to supply sufficient materials or employ qualified workers to prosecute the Work as required, then SMART may issue a written notice to Contractor, requiring Contractor to accelerate the Work and/or furnish additional qualified workers or materials as SMART may consider necessary, at no cost to SMART. If Contractor does not comply with the notice within five (5) Days of date of service thereof, SMART shall have the right (but not a duty) to provide materials and qualified workers to finish the Work or any affected portion of Work, as SMART may elect. SMART may, at its discretion, exclude Contractor from the Site, or portions of the Site or separate Work elements during the time period that SMART exercises this right. SMART will deduct from moneys due or which may thereafter become due under the Contract Documents, the sums necessary to meet expenses thereby incurred and paid to persons supplying materials and doing Work. SMART will deduct from funds or appropriations set aside for purposes of Contract Documents the amount of such payments and charge them to Contractor as if paid to Contractor. Contractor shall remain liable for resulting delay, including liquidated damages and indemnification of SMART from claims of others.

11.4.C Exercise by SMART of the rights conferred upon SMART in paragraph 11.4.B of this Document 00 70 00, is entirely discretionary on the part of SMART. SMART shall have no duty or obligation to exercise the rights referred to in paragraph 11.4.B of this Document 00 70 00 and its failure to exercise such rights shall not be deemed an approval of existing Work progress or a waiver or limitation of SMART's right to exercise such rights in other concurrent or future similar circumstances. The rights conferred upon SMART under paragraph 11.4.B of this Document 00 70 00 are cumulative to SMART's other rights under any provision of the Contract Documents.

11.4.D The SMART may, if it deems necessary for reasons other than those described in Paragraph 10.6.B, direct Contractor to accelerate the Work by increasing crew sizes, working overtime (as permitted by law) and/or performing shift work. If directed to perform overtime and/or shift work, Contractor will work said overtime and/or shift work, and the SMART shall pay Contractor solely for the additional premium wages paid, plus taxes imposed by law on such additional wages. Unless otherwise directed by the SMART, accelerated work shall be

performed utilizing the most cost-effective available method. For example, the SMART shall not be responsible to pay the premium for overtime work if the same work could have been performed on second shift utilizing a lower premium.

11.5 Contractor's Project Data

11.5.A Contractor shall maintain full and correct information as to the number of workers employed in connection with each subdivision of Work, the classification and rate of pay of each worker in form of certified payrolls, the cost to Contractor of each class of materials, tools and appliances used by Contractor in Work, and the amount of each class of materials used in each subdivision of Work. Contractor shall provide SMART with monthly summaries of this information. If Contractor maintains or is capable of generating summaries or reports comparing actual Project costs with Bid estimates or budgets, Contractor shall provide SMART with a copy of such report upon SMART's request and whenever it is generated.

11.5.B Contractor shall maintain daily job reports recording all significant activity on the job, including the number of workers on Site, Work activities, problems encountered and delays. Contractor shall provide SMART with copies for each Day Contractor works on the Project, to be delivered to SMART either the same Day or the following morning before starting Work at the Site. Contractor shall take monthly progress photographs of all areas of the Work. Contractor shall maintain copies of all correspondence with Subcontractors and records of meetings with Subcontractors.

11.5.C SMART shall have the right to audit and copy Contractor's books and records of any type, nature or description relating to the Project (including but not limited to financial records reflecting in any way costs claimed on the Project), and to inspect the Site, including Contractor's trailer, or other job Site office, and this requirement shall be contained in the subcontracts of Subcontractors working on Site. By way of example, SMART shall have the right to inspect and obtain copies of all Contract Documents, planning and design documents, Bid proposal and negotiation documents (subject to Document 00670 [Escrow Bid Documents] if required by the Contract Documents), cost records and job cost variance reports, design modification proposals, value engineering or other cost reduction proposals, revisions made to the original design, job Progress Reports, photographs, and as-built drawings maintained by Contractor. SMART and any other applicable governmental entity shall have the right to inspect all information and documents maintained under this paragraph 11.5 at any time during the Project and for a period of five years following Substantial Completion. This right of inspection shall not relieve Contractor of its duties and obligations under the Contract Documents. This right of inspection shall be specifically enforceable in a court of law, either independently or in conjunction with enforcement of any other rights in the Contract Documents.

11.5.D Contractor shall maintain in a safe place at the Site one record copy of all Drawings, Specifications, Addenda, Contract Modifications, Change Orders, Construction Change Directives, Force Account orders, and written

interpretations and clarifications in good order and annotated to show all changes made during construction. These Project Record Documents, together with all approved Samples and a counterpart of all approved Shop Drawings, shall be maintained and available to SMART for reference. Upon completion of the Work, Contractor shall deliver to SMART, the Project Record Documents.

12 CLAIMS BY CONTRACTOR/NON-JUDICIAL SETTLEMENT PROCEDURE

12.1 Scope

12.1.A The claim notice and documentation procedure described in this Article 12 applies to all claims and disputes arising under the Contract Documents, including without limitation any claim or dispute by any Subcontractor or material supplier, and any claims arising under tort law as well as contract law. All Subcontractors and supplier claims of any type shall be brought only through Contractor as provided in this Article 12. Under no circumstances shall any Subcontractor or supplier make any direct claim against SMART.

12.1.B "Claim" means a written demand or written assertion by Contractor seeking, as a matter of right, the payment of money, the adjustment or interpretation of Contract Documents terms, or other relief arising under or relating to Contract Documents. In order to qualify as a "claim," the written demand must state that it is a claim submitted under this Article 12. A voucher, invoice, proposed change, Application for Payment, cost proposal, RFI, change order request, or other routine or authorized form of request for payment is not a claim under the Contract Documents. If such request is disputed as to liability or amount, then the disputed portion of the submission may be converted to a claim under the Contract Documents by submitting a separate notice and claim in compliance with claim submission requirements herein.

12.1.C The provisions of this Article 12 constitute a non-judicial claim settlement procedure, and also step one of a two-step claim presentment procedure by agreement under Section 930.2 of the California Government Code. Specifically, step one is compliance with this contract claims procedure and filing/administering timely contract claims in accordance with the Contract Documents. Step two is filing a timely Government Code Section 910 claim in accordance with the California Government Code. Any Government Code Section 910 claims shall be presented in accordance with the Government Code and shall affirmatively indicate Contractor's prior compliance with the claims procedure herein and previous dispositions under this Article.

12.1.D The provisions of this Article 12 shall survive termination, breach, or completion of the Contract Documents. Contractor shall bear all costs incurred in the preparation and submission of a claim.

12.2 Procedure

12.2.A Disputed Work. Should any clarification, determination, action, or inaction by SMART or Architect/Engineer, Work, third party, or any other event whatsoever, in the opinion of Contractor, exceed the requirements of or not comply with Contract Documents in any way, or otherwise result in Contractor seeking

additional compensation in time or money or damages for any reason (collectively "Disputed Work"), then Contractor shall so notify SMART. Contractor and SMART shall make good faith attempts to resolve informally any and all such issues, claims and/or disputes.

12.2.B Duty to Work During Disputes. Notwithstanding any dispute or Disputed Work, Contractor shall continue to prosecute the Work and the Disputed Work in accordance with the determinations of SMART. Contractor's sole remedy for Disputed Work is to pursue the remedies in this Article 12 and follow the determinations of SMART.

12.2.C Timely Notice of Disputed Work Required. Before commencing any Disputed Work, or within ten (10) Days after Contractor's first knowledge of the Disputed Work, whichever is earlier, Contractor shall file a written notice and preliminary cost proposal for the Disputed Work with SMART stating clearly and in detail its objection and reasons for contending the Disputed Work is outside or in breach of the requirements of Contract Documents. The written notice must identify the subcontractors, vendors, suppliers effected, if any, sufficient for SMART to visit the site to inspect the work and/or conduct a telephonic interview of the persons involved, and/or to photograph the work in question; and Contractor is encouraged to supply digital photographs by email if possible. The preliminary cost proposal must provide a good faith preliminary estimate of the labor (workers, crews), equipment and/or materials involved, and a corresponding good faith preliminary estimate of cost. If a written notice and preliminary cost proposal for Disputed Work is not issued within this time period, or if Contractor proceeds with the Disputed Work without first having given the notice of the Disputed Work, Contractor shall waive its rights to further claim on the specific issue.

12.2.D Timely Notice of Potential Claims Required. SMART will review Contractor's timely notice and preliminary cost proposal for Disputed Work and provide a decision. If, after receiving the decision, Contractor disagrees with it or still considers the Work required of it to be outside of the requirements of Contract Documents, then Contractor shall so notify SMART, in writing, within ten (10) Days after receiving the decision, by submitting a notice of potential claim, stating that a formal claim will be issued. (If SMART should fail to provide a decision on a notice and preliminary cost proposal within thirty (30) days, then Contractor shall submit a notice of potential claim within ten days following the thirtieth (30th) day, i.e., or by the 40th day following the notice and preliminary cost proposal.) Contractor shall continue to prosecute the Disputed Work to completion.

12.2.E Quarterly Claims Required. At the end of each calendar year quarter (March 31, June 30, September 30, and December 31) of each year, for each and every notice of potential claim that Contractor may have submitted in that quarter, Contractor shall submit a formal claim in the form specified herein. Contractor may file a single consolidated claim each quarter, or may file separate claims each quarter, as Contractor sees fit, provided Contractor complies with the requirements

below. (Contractor may defer until the next reporting period the filing of a formal claim for any notices of potential claim timely issued within the last 15 days of the prior quarter.) The formal claim(s) shall include all arguments, justification, cost or estimates, schedule analysis, and detailed documentation supporting Contractor's position, for each notice of potential claim that Contractor intends to pursue as a formal claim (further described below).

12.2.F Claim Updates Required. If Disputed Work persists longer than a single calendar quarter, then Contractor shall, every quarter until the Disputed Work ceases, submit to SMART a document titled "Claim Update" that shall update and quantify all elements of the claim as completely as possible. Contractor's failure to submit a Claim Update or to quantify costs every quarter shall result in waiver of the claim for that period. Claims or Claim Updates stating that damages, total damages (direct and indirect), schedule impact and/or any time extension will be determined at a later date shall not comply with this subparagraph and shall result in Contractor waiving its claim(s). Contractor shall also maintain a continuing "claims log" that shall list all outstanding claims and their value and provide such log to SMART quarterly.

12.2.G Claim Negotiations required. Upon receipt of Contractor's formal claim(s) including all arguments, justifications, cost or estimates, schedule analysis, and documentation supporting its position as required herein, SMART or its designee will review the issue and render a final determination. Contractor and SMART may mutually agree upon a claims resolution protocol, a neutral facilitator or mediator, or other alternative dispute resolution procedures, as appropriate. SMART may in its discretion conduct an administrative hearing on Contractor's claim, in which case Contractor shall appear, participate, answer questions and inquiries, and present any further document, schedules or analysis requested by SMART to evaluate and decide Contractor's claim.

12.3 Claim Format

12.3.A Contractor shall submit the formal claim(s) with a cover letter and certification of the accuracy of the formal claim.

12.3.B The formal claim(s) shall list separately each notice of potential claim that Contractor intends to pursue as a formal claim(s), and for each such item separately, Contractor shall provide the following:

12.3.B.1 Summary of the claim, including underlying facts, entitlement, schedule analysis, quantum calculations, contract provisions supporting relief;

12.3.B.2 List of documents relating to claim including Specifications, Drawings, clarifications/requests for information, schedules, notices of delay, and any others;

12.3.B.3 Chronology of events and correspondence;

12.3.B.4 Analysis of claim merit;

12.3.B.5 Analysis of claim cost; and

12.3.B.6 Attach supporting cost and schedule documents as required in this Article and elsewhere in the Contract Documents (e.g., Section 01 32 16).

12.3.C For each notice of potential claim that Contractor intends to pursue as a formal claim, Contractor shall establish in the formal claim a direct causal link between the separate item of cost/time requested, the separate notices of potential claim timely issued, and the specific changed Work asserted. Total cost claims shall not be allowed.

12.3.D Claims shall be calculated in the same manner as Change Orders per Section 01 25 00 (Clarification and Modification Procedures). EXCEPT WHERE PROVIDED BY LAW, OR ELSEWHERE IN THESE CONTRACT DOCUMENTS (IF APPLICABLE), SMART SHALL NOT BE LIABLE FOR SPECIAL OR CONSEQUENTIAL DAMAGES, AND CONTRACTOR SHALL NOT INCLUDE THEM IN ITS CLAIMS. CONTRACTOR SHALL BE LIMITED IN ITS RECOVERY ON CLAIMS TO THE CHANGE ORDER CALCULATIONS SET FORTH IN SECTION 01 25 00 (CLARIFICATION AND MODIFICATION PROCEDURES).

12.4 Mediation

12.4.A If Contractor's claims submitted in accordance with this Article 12 at Project completion total less than $375,000, then claims resolution shall first proceed in the manner prescribed by Article 1.5, Chapter 1, Part 3 of Division 2 of the California Public Contract Code, found in Section 01 41 00 (Regulatory Requirements).

12.4.B If Contractor's claims submitted in accordance with this Article 12 at Project completion exceed $375,000, then, as a condition precedent to litigation (or if otherwise permitted by the Contract Documents, arbitration) thereon, such claims must first be mediated. Mediation shall be non-binding and utilize the services of a mediator mutually acceptable to the parties and, if the parties cannot agree, a mediator selected by the American Arbitration Association from its panel of approved mediators trained in construction industry mediation, having a minimum of twenty (20) years' experience in the construction industry. All statutes of limitation shall be tolled from the date of the demand for mediation until a date two weeks following the mediation's conclusion. All unresolved Contractor claims shall be submitted to the same mediator. The cost of mediation shall be equally shared.

12.5 Subcontractor Claims

12.5.A Contractor shall present as its claims all Subcontractor, sub-Subcontractor and supplier claims of any type, and prove them under the terms of the Contract Documents. SMART shall not be directly liable to any Subcontractor, any supplier, or any other person or organization, or to any surety for or employee or agent of any of them, for damages or extra costs of any type arising out of or resulting from the Project.

12.6 Waiver

12.6.A If Contractor fails to comply with this Article 12 as to any claim, then Contractor shall waive its rights to such claim.

12.6.B All claim(s), Disputed Work items or issue(s) not raised in a timely notice, timely notice of potential claim and then timely claim submitted under this Article 12, may not be asserted in any subsequent Government Code section 910 claim, litigation, or legal action.

12.6.C Contractor may request an extension of time to comply with the claims procedure herein but must do so in advance of time periods expiring and SMART must give its approval in writing (which approval may be withheld in SMART discretion.) As to any other feature of the claim procedure herein (and its claims waiver feature), it may not be waived or altered absent a written change order signed by both parties and approved as to form by their legal counsel.

12.6.D SMART shall not be deemed to waive or alter any provision under this Article 12, if at SMART's sole discretion, a claim is administered in a manner not in accord with this Article 12.

13 LEGAL AND MISCELLANEOUS

13.1 Laws and Regulations

13.1.A Contractor shall keep fully informed of and shall comply with all laws, ordinances, regulations and orders of any properly constituted authority affecting the Contract Documents, Work and persons connected with Work, and shall protect and indemnify SMART and its officers, employees, consultants and agents against any claim or liability, including attorney's fees, arising from or based on violation of law, ordinance, regulation or order, whether by Contractor or by Subcontractors, employees or agents. Authorized persons may at any time enter upon any part of Work to ascertain compliance of all applicable laws, ordinances, regulations, and orders.

13.1.B Whenever Drawings and Specifications require higher standards than are required by any applicable law, ordinance, regulation or order, Drawings and Specifications shall govern. Whenever Drawings and Specifications require something that will violate such laws, ordinances, regulations, or orders, then such laws, ordinances, regulations or orders shall govern.

13.1.C Contractor shall comply with applicable portions of Title 8 (Industrial Relations), Title 19 (Public Safety), Title 22 (Social Security, Division of Health) and Title 24 (California Building Standards Code), California Code of Regulations (Uniform Building Code) (most recent edition), Public Contract Code. Whenever Contract Documents require larger sizes or higher standards than are required by any applicable law, ordinance, regulation or order, Contract Documents shall govern. Whenever Contract Documents require something that will violate such laws, ordinances, regulations, or orders, then such laws, ordinances, regulations or orders shall govern.

13.2 Permits and Taxes

13.2.A SMART will pay applicable building permits, school, sanitation, and water demand fees, except as otherwise provided in Section 01 11 00 (Summary of Work). Unless otherwise noted in Section 01 11 00 (Summary of Work), Contractor shall procure all permits and licenses applicable to the Work (including environmental matters to the extent applicable); pay all charges and fees, including fees for street opening permits; comply with, implement and acknowledge effectiveness of all permits; initiate and cooperate in securing all required notifications or approvals therefore; and give all notices necessary and incident to due and lawful prosecution of Work. Contractor shall pay all fees related to deferred submittals such as, but not limited to, fire sprinkler system, underground utilities, fuel storage tank and fire alarm system. Contractor shall pay all sales and/or use taxes levied on materials, supplies, or equipment purchased and used on or incorporated into Work, and all other taxes properly assessed against equipment or other property used in connection with Work, without any increase in the Contract Sum. Contractor shall make necessary arrangements with proper authorities having jurisdiction over roads, streets, pipelines, navigable waterways, railroads, and other works in advance of operations, even where SMART may have already obtained permits for the Work.

13.3 Suspension of Work

13.3.A SMART may, without cause, order Contractor in writing to suspend, delay or interrupt Work in whole or in part for such period of time as SMART may determine. An adjustment shall be made for increases in cost of performance of Work of the Contract Documents caused by any such suspension, delay or interruption, calculated using the measures set forth in Section 01 25 00 (Clarification and Modification Procedures). No adjustment shall be made to extent that:

13.3.A.1 Performance is, was or would have been so suspended, delayed or interrupted by another cause for which Contractor is responsible; or

13.3.A.2 An equitable adjustment is made or denied under any other provision of Contract Documents; or

13.3.A.3 The suspension of Work was the direct or indirect result of Contractor's failure to perform any of its obligations hereunder. Adjustments made in cost of performance may have a mutually agreed fixed or percentage fee; if the parties cannot agree, Contractor may file a claim under Article 12 of this Document 00 70 00.

13.4 Termination of Contract For Cause

13.4.A SMART may declare Contractor in default of Contract Documents and SMART may terminate Contractor's right to proceed under the Contract Documents for cause:

13.4.A.1 Should Contractor make an assignment for the benefit of creditors; admit in writing its inability to pay its debts as they become due; file a voluntary petition in bankruptcy; be adjudged as bankrupt or insolvent; be the subject of an involuntary petition in bankruptcy which

is not dismissed within 60 Days; file a petition or answer seeking for itself any reorganization, arrangement, composition, readjustment, liquidation, dissolution, or similar relief under any present or future statute, law, or regulation; file any answer admitting or not contesting the material allegations of a petition filed against Contractor in any such proceeding; or seek, consent to, or acquiesce in, the appointment of any trustee, receiver, custodian or liquidator of Contractor or of all or any substantial part of its properties or if Contractor, its directors or shareholders, take action to dissolve or liquidate Contractor; or

13.4.A.2 Should Contractor commit a material breach of the Contract Documents. If SMART declares Contractor in default due to material breach, however, SMART must allow Contractor an opportunity to cure such breach within 10 Days of the date of notice from SMART to Contractor providing notice of the default; or, if such breach is curable but not curable within such 10-Day period, within such period of time as is reasonably necessary to accomplish such cure; or

13.4.A.3 Should Contractor violate or allow (by a Subcontractor or other person or entity for which Contractor is responsible) a violation of any valid law, statute, regulation, rule, ordinance, permit, license or order of any governmental agency applicable to the Project or Work and does not cure (or cause to be cured) such violation within 10 Days of the date of the notice from SMART to Contractor demanding such cure; or, if such violation is curable but not curable within such 10-Day period, within such period of time as is reasonably necessary to accomplish such cure.

13.4.B In order for Contractor to avail itself of a time period in excess of 10 Days, pursuant to subsections 13.4.A.2 and 13.4.A.2, Contractor must provide SMART within the 10-Day period with a written plan acceptable to SMART to cure said breach or violation which includes, for example, evidence of necessary resources, Subcontractor commitments, schedules and recovery schedules meeting Contract Document requirements and showing a realistic and achievable plan to cure the breach or violation. Contractor must then diligently commence and continue such cure according to the written plan.

13.4.C If SMART at any time reasonably believes that Contractor is or may be in default under the Contract Documents as provided in paragraph 13.4.A of this Document 00 70 00, SMART may in its sole discretion notify Contractor of this fact and request written assurances from Contractor of performance of Contract Documents and a written plan from Contractor to remedy any default under the terms of Contract Documents which SMART may advise Contractor of in writing. Contractor shall, within 10 Days of SMART's request, deliver a written cure plan which meets the requirements of the written plan deliverable under paragraph 13.4.A.2 of this Document 00 70 00. Failure of Contractor to provide such written assurances of performance and the required written plan, within 10 Days of request, will constitute a material breach of Contract Documents sufficient to justify termination for cause.

13.4.D In event of termination for cause, SMART will immediately serve written notice thereof upon Surety, if a Construction Performance Bond was required under contract, and Contractor. Surety shall have the rights and obligations set forth in Document 00 61 13.13 (Performance Bond). Subject to the Surety's rights under the Performance Bond (which rights are waived upon a default thereunder), SMART may take over the Work and prosecute it to completion by contract or by any other methods it may deem advisable.

13.4.E In the event of termination by SMART as provided in paragraph 13.4.A of this Document 00 70 00 for cause:

13.4.E.1 SMART will compensate Contractor for the value of the Work delivered to SMART upon termination as determined in accordance with the Contract Documents, subject to all rights of offset and back charges, and provided that Contractor provides SMART with updated as-builts and Project Record Documents showing the Work performed up to the date of termination. However, SMART will not compensate Contractor for its costs in terminating the Work or any cancellation charges owed to third parties.

13.4.E.2 Contractor shall deliver to SMART possession of the Work in its then condition including, but not limited to, all designs, engineering, Project records, Project Record Documents, cost data of all types, Drawings and Specifications and contracts with vendors and Subcontractors, all other documentation associated with the Project, and all construction supplies and aids dedicated solely to performing the Work which, in the normal course of construction, would be consumed or only have salvage value at the end of the construction period. Contractor shall remain fully liable for the failure of any Work completed and materials and equipment provided through the date of such termination to comply with the provisions of the Contract Documents. The provisions of this paragraph 13.4.E shall not be interpreted to diminish any right which SMART may have to claim and recover damages for any breach of Contract Documents or otherwise, but rather, Contractor shall compensate SMART for all loss, cost, damage, expense, and/or liability suffered by SMART as a result of such termination and failure to comply with Contract Documents.

13.4.F SMART's rights under paragraph 13.4.E.2 shall be specifically enforceable to the greatest extent permitted by law. SMART shall, to the extent applicable, have all other rights and remedies set forth in any Contract Document.

13.4.G SMART may terminate portions or parts of the Work for cause, provided these portions or parts (i) have separate geographic areas from parts or portions of the Work not terminated or (ii) are limited to the Work of one or more specific trades or Subcontractors. In such case, Contractor shall cooperate with other contractors as required under Article 6 of this Document 00 70 00.

13.4.H In the event a termination for cause is determined to have been made wrongfully or without cause, then the termination shall be treated as a termination for

convenience, and Contractor shall have no greater rights than it would have had following a termination for convenience. Any Contractor claim arising out of a termination for cause shall be made in accordance with Article 12 of this document and calculated in accordance with the provisions of the Contract Documents on Change Orders and claims. No other loss cost, damage, expense, or liability may be claimed, requested, or recovered by Contractor.

13.5 Termination of Contract For Convenience

13.5.A SMART may terminate performance of the Work under the Contract Documents in accordance with this clause in whole, or from time to time in part, whenever SMART shall determine that termination is in SMART's best interest. Termination shall be effected by SMART delivering to Contractor notice of termination specifying the extent to which performance of the Work under the Contract Documents is terminated and the effective date of the termination.

13.5.B After receiving a notice of termination under paragraph 13.5.A of this Document 00 70 00, and except as otherwise directed by SMART, Contractor shall:

13.5.B.1 Stop Work under the Contract Documents on date and to extent specified in notice of termination;

13.5.B.2 Place no further orders or subcontracts for materials, services, or facilities except as necessary to complete portion of Work under the Contract Documents which is not terminated;

13.5.B.3 Terminate all orders and subcontracts to extent that they relate to performance of Work terminated by the notice of termination;

13.5.B.4 Assign to SMART in manner, at times, and to extent directed by SMART, all right, title, and interest of Contractor under orders and subcontracts so terminated. SMART shall have the right, in its sole discretion, to settle or pay any or all claims arising out of termination of orders and subcontracts;

13.5.B.5 Settle all outstanding liabilities and all claims arising out of such termination of orders and subcontracts, with approval or ratification of SMART to extent SMART may require. SMART's approval or ratification shall be final for purposes of this paragraph 13.5;

13.5.B.6 Transfer title to SMART, and deliver in the manner, at the times, and to the extent, if any, directed by SMART, all fabricated or unfabricated parts, Work in process, completed Work, supplies, and all other material produced as part of, or acquired in connection with performance of, Work terminated by the notice of termination, and completed or partially completed drawings, drawings, specifications, information, and other property which, if the Project had been completed, would have been required to be furnished to SMART;

13.5.B.7 Use its best efforts to sell, in manner, at times, to extent, and at price or prices that SMART directs or authorizes, any property of types referred to in paragraph 13.5.B.6 of this Document 00 70 00, but Contractor shall not be required to extend credit to any purchaser and may acquire any such property under conditions prescribed and at price

or prices approved by SMART. Proceeds of transfer or disposition shall be applied to reduce payments to be made by SMART to Contractor under the Contract Documents or shall otherwise be credited to the price or cost of Work covered by Contract Documents or paid in such other manner as SMART may direct;

13.5.B.8 Complete performance of the part of the Work which was not terminated by the notice of termination; and

13.5.B.9 Take such action as may be necessary, or as SMART may direct, to protect and preserve all property related to Contract Documents which is in Contractor's possession and in which SMART has or may acquire interest.

13.5.C After receipt of a notice of termination under paragraph 13.5.A of this Document 00 70 00, Contractor shall submit to SMART its termination claim, in form and with all certifications required by Article 12 of this Document 00 70 00. Contractor's termination claim shall be submitted promptly, but in no event later than 6 months from effective date of the termination. Contractor and SMART may agree upon the whole or part of the amount or amounts to be paid to Contractor because of a total or partial termination of Work under this paragraph 13.5. If Contractor and SMART fail to agree on the whole amount to be paid to Contractor because of the termination of the Work under this paragraph 13.5, SMART's total liability to Contractor by reason of the termination shall be the total (without duplication of any items) of:

13.5.C.1 The reasonable cost to Contractor, without profit, for all Work performed prior to the effective date of the termination, including Work done to secure the Project for termination. Reasonable cost may not exceed the applicable percentage completion values derived from the Progress Schedule and the schedule of values. Deductions shall be made for cost of materials to be retained by Contractor, cost of Work defectively performed, amounts realized by sale of materials, and for other appropriate credits against cost of Work. Reasonable cost will include reasonable allowance for Project overhead and general administrative overhead not to exceed a total of ten percent of direct costs of such Work. When, in SMART's opinion, the cost of any item of Work is excessively high due to costs incurred to remedy or replace Defective or rejected Work, reasonable cost to be allowed will be the estimated reasonable cost of performing the Work in compliance with requirements of Contract Documents and excessive actual cost shall be disallowed.

13.5.C.2 A reasonable allowance for profit on cost of Work performed as determined under paragraph 13.5.C.1 of this Document 00 70 00, provided that Contractor establishes to SMART's satisfaction that Contractor would have made a profit had the Project been completed and provided further that the profit allowed shall not exceed 5 percent of cost.

13.5.C.3 Reasonable costs to Contractor of handling material returned to vendors, delivered to SMART or otherwise disposed of as directed by SMART.

13.5.C.4 A reasonable allowance for Contractor's internal administrative costs in preparing termination claim.

13.5.D Except as provided in this paragraph 13.5.C of this Document 00 70 00, SMART shall not be liable for costs incurred by Contractor or Subcontractors after receipt of a notice of termination. Such non-recoverable costs include, but are not limited to, anticipated profits on Work not performed as of the date of termination, post-termination employee salaries, post-termination general administrative expenses, post-termination overhead or unabsorbed overhead, costs of preparing and submitting Contractor's Bid, attorney's fees of any type, and all costs relating to prosecution of claim or lawsuit.

13.5.E SMART shall have no obligation to pay Contractor under this paragraph 13.5 unless and until Contractor provides SMART with updated and acceptable as-builts and Project Record Documents for Work completed prior to termination.

13.5.F In arriving at the amount due Contractor under this clause, there shall be deducted:

13.5.F.1 All unliquidated advances or other payments on account previously made to Contractor which are applicable to the terminated portion of Contract Documents;

13.5.F.2 Any claim which SMART may have against Contractor in connection with Contract Documents; and

13.5.F.3 The agreed price for, or proceeds of sale of, any materials, supplies, or other things kept by Contractor or sold under provisions of this paragraph 13.5, and not otherwise recovered by or credited to SMART.

13.6 Contingent Assignment of Subcontracts

13.6.A Contractor hereby assigns to SMART each Subcontract for a portion of the Work, provided that:

13.6.A.1 The assignment is effective only after SMART's termination of Contractor's right to proceed under the Contract Documents (or portion thereof relating to that Subcontract) pursuant to paragraphs 13.4 or 13.5 of this Document 00 70 00;

13.6.A.2 The assignment is effective only for the Subcontracts which SMART expressly accepts by notifying the Subcontractor in writing;

13.6.A.3 The assignment is subject to the prior rights, if any, of the Surety, obligated by Document 00 61 13.13 (Construction Performance Bond) provided under the Contract Documents, where the Surety exercises its rights to complete the Contract;

13.6.A.4 After the effectiveness of an assignment, Contractor shall, at its sole cost and expense (except as otherwise provided in paragraphs 13.4 or 13.5 of this Document 00 70 00), sign all instruments, and take all actions reasonably requested by SMART to evidence and confirm the effectiveness of the assignment in SMART; and

13.6.A.5 Nothing in this paragraph 13.6 shall modify or limit any of Contractor's obligations to SMART arising from acts or omissions occurring before the effectiveness of any Subcontract assignment, including but not limited to all defense, indemnity and hold-harmless obligations arising from or related to the assigned Subcontract.

13.7 Remedies and Contract Integration

13.7.A Subject to Contract Documents provisions regarding Contractor claims, claim review, and claim resolution, and subject to the limitations therein, the exclusive jurisdiction and venue for resolving all claims, counter claims, disputes, and other matters in question between SMART and Contractor arising out of or relating to Contract Documents, any breach thereof or the Project shall be the applicable court of competent jurisdiction located in the State of California, County of Sonoma. All SMART remedies provided in the Contract Documents shall be taken and construed as cumulative and not exclusive; that is, in addition to each and every other remedy herein provided; and in all instances SMART shall have any and all other equitable and legal rights and remedies which it would have according to law.

13.7.B The Contract Documents, any Contract Modifications, and Change Orders shall represent the entire and integrated agreement between SMART and Contractor regarding the subject matters hereof and thereof and shall constitute the exclusive statement of the terms of the parties' agreement. The Contract Documents, and any Contract Modifications and Change Orders, shall supersede any and all prior negotiations, representations, or agreements, written or oral, express or implied, that relate in any way to the subject matter of the Contract Documents or written Modifications. SMART and Contractor represent and agree that, except as otherwise expressly provided in the Contract Documents, they are entering into the Contract Documents and any subsequent written Modification in sole reliance upon the information set forth or referenced in the Contract Documents or Contract Modifications and the parties are not and will not rely on any other information.

13.7.C In any proceeding to enforce the Contract Documents, Contractor and SMART agree that the finder of fact shall receive detailed instructions on the meaning and operation of the Contract Documents, including their conditions, limitations of liability and remedies clauses, claims procedures and any other provisions impacting major defenses and theories of liability of the parties. Detailed findings of fact shall be requested, to verify Contract enforcement.

13.7.D Either party's waiver of any breach or failure to enforce any of the terms, covenants, conditions, or other provisions of the Contract Documents at any time shall not in any way affect, limit, modify or waive that party's right thereafter to enforce or compel strict compliance with every term, covenant, condition, or other provision hereof, any course of dealing or custom of the trade or oral representations notwithstanding.

13.8 Patents

13.8.A Fees or claims for any patented invention, article or arrangement that may be used upon or in any manner connected with performance of the Work or any part thereof shall be included in the Bid price for doing the Work. Contractor shall defend, indemnify and hold harmless SMART and each of its officers, employees, consultants and agents, including, but not limited to, the Board and each SMART's Representative, from all damages, claims for damages, costs or expenses in law or equity, including attorney's fees, arising from or relating to any claim that any article supplied or to be supplied under the Contract Documents infringes on the patent rights, copyright, trade name, trademark, service mark, trade secret or other intellectual property right of any person or persons or that the person or entity supplying the article does not have a lawful right to sell the same. Such costs or expenses for which Contractor agrees to indemnify and hold harmless the above indemnities include but are not limited to any and all license fees, whether such fees are agreed by any indemnitee or ordered by a court or administrative body of any competent jurisdiction.

13.9 Substitution for Patented And Specified Articles

13.9.A Except as noted specifically in Specifications, whenever in Specifications, material or process is designated by patent or proprietary name or by name of manufacturer, such designation shall be deemed to be used for purpose of facilitating description of material and process desired, and shall be deemed to be followed by the words "or Approved Equal" and Contractor may offer any substitute material or process that Contractor considers "equal" in every respect to that so designated and if material or process offered by Contractor is, in opinion of SMART, Equal in every respect to that so designated, its use will be approved. However, Contractor may utilize this right only by timely submitting Document 00 63 25 (Substitution Request Form) if provided in the bid solicitation documents. A substitution will be approved only if it is a true Equal item in every aspect of its design and quality, including but not limited to its dimensions, weights, service requirements, durability, functioning, impact on contiguous construction elements, overall schedule, and design.

13.10 Interest of Public Officers

13.10.A No representative, officer, or employee of SMART, no member of the governing body of the locality in which the Project is situated, no member of the locality in which SMART was activated, and no other public official of such locality or localities who exercises any functions or responsibilities with respect to the Project, during the tenure of the official or for one year thereafter, shall, as principal, agent, attorney or otherwise, be directly or indirectly interested, in the Contract Documents or the proceeds thereof.

13.11 Limit of Liability

13.11.A Smart, and each of its officers, board members, employees, consultants, and agents including, but not limited to, architect and each other smart representative, shall have no liability to contractor for special, consequential, or

incidental damages, except to the limited extent that these contract documents or applicable public contracting statutes may specify their recovery.

13.12 Severability

13.12.A Any provisions or portions thereof of Contract Documents that are prohibited by, unlawful, or unenforceable under any applicable law of any jurisdiction shall as to such jurisdiction be ineffective without affecting other provisions or portions thereof in the Contract Documents.

14 MODIFICATIONS OF CONTRACT DOCUMENTS

14.1 Alterations, Modifications and Force Account Work

14.1.A No modification or deviation from the Drawings and Specifications will be permitted except by written Contract Modification.

14.1.B SMART may, without notice to the sureties, make alterations, deviations, additions to, or deletions from Contract Documents; increase or decrease the quantity of any item or portion of the Work; expand, contract, or otherwise change the Contract Time; delete any item or portion of the Work; and/or require extra Work. Contractor shall perform such Work under applicable provisions of the Contract Documents, unless specifically provided otherwise at the time the change is ordered. In the case of any ordered extra Work, SMART reserves the right to furnish all or portions of associated labor, material, and equipment, which Contractor shall accept and use without payment for costs, markup, profit, or otherwise for such SMART-furnished labor, materials, and equipment.

14.1.C If changes ordered in design, workmanship or materials are of such a nature as to increase or decrease the cost of any part of the Work, the price fixed in the Contract Documents shall be increased or decreased as set forth in a written Change Order by the amount that Contractor and SMART may agree upon as a reasonable and proper allowance for the cost increase or decrease. If an agreement cannot be reached, then SMART will reach a determination, which shall be final, subject to Contractor's rights under Article 12 of this Document 00 70 00. In all cases Contractor shall perform the changed Work as directed by SMART subject to Contractor's rights under Article 12 of this Document 00 70 00.

14.1.D A Change Order will become effective when signed by SMART. If SMART exercises its right to decide disputed issues pertaining to changed Work as set forth in Articles 12 and 14 of this Document 00 70 00, then the resulting Change Order shall be effective when signed by SMART, notwithstanding that Contractor has not signed it.

14.1.E Changes not affecting the Contract Time or Contract Sum of the Work, in SMART's discretion, may be set forth in a written RFI-Reply executed by SMART or Architect's Supplemental Instruction (ASI). Execution of such an RFI-Reply or ASI constitutes Contractor's agreement to make the specified change without change to the Contract Sum or the Contract Time.

14.1.F Changes or deviations from Contract Documents affecting the Contract Time or Contract Sum of the Work shall not be made without the authority of an effective Change Order or Construction Change Directive as provided in Section 01 25 00

(Clarification and Modification Procedures), except in cases of emergency discussed in Article 15 of this Document 00 70 00.

14.1.G Changes in the Work made pursuant to this Article 14 and extensions of Contract Time necessary by reason thereof shall not in any way release the guarantees and warranties given by Contractor pursuant to provisions of the Contract Documents, nor shall such changes in the Work relieve or release the Sureties of bonds executed pursuant to said provisions. The Sureties, in executing such bonds, shall be deemed to have expressly agreed to any such change in the Work and to any extension of time made by reason thereof.

14.1.H Procedures for Modifications of Contract Documents and for calculating the cost of extra Work are given in Section 01 25 00 (Clarification and Modification Procedures). Regarding delay and impact costs of any nature, Contractor may not seek delay compensation for on-Site or off-Site costs based on formulas, e.g., "Eichlay" or other formula. Rather, Contractor shall prove actual costs resulting from such delays. If Contractor requests compensation for delay to the construction, then Contractor shall prove and document actual costs plus markup per the cost categories and procedures in Section 01 25 00 (Clarification and Modification Procedures) in order to request, claim or prove compensation for delay.

14.2 Time Allowances

14.2.A The Contract Time may only be changed by Change Order or by Contract Modification, and all-time limits stated in the Contract Documents are of the essence of Contract Documents.

14.2.B The Contract Time will be adjusted in an amount equal to the time lost or added due to:

14.2.B.1 Changes in the Work ordered by SMART;

14.2.B.2 Acts or neglect by SMART, Architect, any SMART's Representative, utility owners or other contractors performing other work, provided that Contractor has fully and completely performed its responsibilities under the Contract Documents; or

14.2.B.3 Fires, floods, epidemics, abnormal weather conditions beyond the parameters otherwise described or referenced in paragraph 14.4 below, earthquakes, civil or labor disturbances, strikes or acts of God, provided damages resulting therefrom are not the result of Contractor's failure to protect the Work as required by Contract Documents.

14.2.C The Contract Time shall not be extended for any cause identified in paragraph 14.2.B above, however, unless:

14.2.C.1 Contractor actually has been prevented from completing any part of the Work within the Contract Time due to delay that is beyond Contractor's control and due to reasons for which Contractor is not responsible (delays attributable to and within the control of a Subcontractor, or its subcontractors, or supplier shall be deemed to be delays within the control of Contractor);

14.2.C.2 A claim for delay is made as provided herein; and

14.2.C.3 Contractor submits a Time Impact Evaluation as required under Section 01 32 16 (Progress Schedules and Reports) that demonstrates actual delay to critical Work activities that actually delay the progress of the Work in the amount of time requested.

14.3 Notice of Delay

14.3.A Within seven (7) Days of the beginning of any delay, Contractor shall notify SMART in writing, by submitting a notice of potential claim, of all anticipated delays resulting from the delay event in question. Any request for extension of time shall be accompanied by Contractor's written statement that the adjustment claimed is the entire adjustment to which the claimant is entitled as a result of the occurrence of said event and shall include a written schedule document that demonstrates delay to the critical path using a Time Impact Evaluation as specified in Section 01 32 16 (Progress Schedules and Reports). SMART will determine all claims and adjustments in the Contract Time. No claim for an adjustment in the Contract Time will be valid and such claim will be waived if not submitted in accordance with the requirements of this paragraph 14.3.A.

14.4 Non-Compensable Time Extensions; Adverse Weather Parameters

14.4.A Where Contractor is prevented from completing any part of the Work within the Contract Time due to delay beyond the reasonable control of Contractor and SMART, e.g., adverse weather conditions exceeding Contract Documents parameters, earthquakes, Acts of God and epidemics, and acts of other contractors or utilities. In such cases, an extension of Contract Time, in an amount equal to the time lost due to such delay (without compensation), shall be Contractor's sole and exclusive remedy for such delay. The adverse weather contingency for this Contract is provided in Document 00 73 00 (Supplementary Conditions).

14.4.B Delays due to abnormal or adverse weather conditions will not be allowed for weather conditions that fall within the Contract's adverse weather contingency, nor will Contractor be entitled to any extension of Contract Time for any such delays. Contractor shall be entitled to an extension of Contract Time for adverse weather only (i) if the number of workdays of adverse weather, recognize as provided in this paragraph 14.4, exceeds these parameters (ii) Contractor proves that adverse weather actually caused delays to Work that is on the critical path, and (iii) Contractor satisfies the other requirements of this paragraph 14.4.

14.4.C In order to qualify as an adverse weather day with respect to the foregoing parameters, daily rainfall must exceed 0.1 of an inch or more at the National Oceanic & Atmospheric Administration weather station identified in Document 00 73 00 (Supplementary Conditions), and Contractor must give SMART written notice of its intent to claim an adverse weather day within one Day of the adverse weather day occurring. Contractor shall at all times employ all available mitigation measures to enable Work to continue.

14.4.D Contractor shall include the foregoing rain parameters as in its Progress Schedule as required in Section 01 32 16 (Progress Schedules and Reports). As Work on the

critical path is affected by rain, Contractor shall notify SMART and request that the days be moved to the affected activities. Any adverse weather days remaining shall be considered Project float.

14.4.E Subject to the other requirements of this paragraph, adverse weather days shall be recognized for the actual number of days Contractor proves it was delayed by adverse weather. For example, and not by way of limitation, if rain exceeding the amount described in paragraph 14.4.C does not in fact delay Contractor's progress on the critical path, then no adverse weather days shall be recognized. Conversely, if Contractor proves that rain exceeding the amount described in paragraph 14.4.C causes delay to Contractor for a period longer than the number of rain days incurred (e.g., if it rains during grading Work), then all such days shall be recognized as adverse weather days.

14.4.F Contractor shall take reasonable steps to mitigate potential weather delays, such as dewatering the Site, lime treatment, and covering Work and material that could be affected adversely by weather. Failure to do so shall be cause for SMART to not recognize adverse weather days, where Contractor could have avoided or mitigated the potential delay by exercising reasonable care.

14.5 Compensable Time Extensions

14.5.A Contractor may receive a time extension and be compensated for delays caused directly and solely by SMART. Provided Contractor provides proper notice and documentation under Section 01 32 16, such compensation may include extended field or home office overhead, field supervision, escalation charges, acceleration costs and extended subcontractor costs.

14.5.B Contractor shall not be entitled to any time extension or compensation for any delays caused in whole or in part by Contractor's failure to perform its obligations under the Contract Documents, or during periods of delay concurrently caused by Contractor and either SMART or others.

14.5.C Contractor shall not be entitled to damages for delay to the Work caused by the following reasons:

14.5.C.1 SMART's right to sequence the Work in a manner which would avoid disruption to SMART's contractors and their subcontractors and SMART's employees, exercised as a result of Contractor's failure to perform its cooperation and coordination responsibilities required by Contract Documents; SMART's enforcement of any government act or regulation; or the provisions of the Contract Documents; and

14.5.C.2 Extensive requests for clarifications to Contract Documents or Contract Modifications thereto, provided such clarifications or Contract Modifications are processed by SMART or its consultants in a reasonable time commensurate with Contract Documents requirements.

14.6 Liquidated Damages

14.6.A Time is of the essence. Execution of Contract Documents by Contractor shall constitute acknowledgement by Contractor that Contractor understands, has ascertained and agrees that SMART will actually sustain damages in the amount

fixed in the Contract Documents for each and every Day during which completion of Work required is delayed beyond expiration of time fixed for completion or extensions of time allowed pursuant to provisions hereof. Contractor and SMART agree that specified measures of liquidated damages shall be presumed to be the damages actually sustained by SMART as defined below, and that because of the nature of the Project, it would be impracticable or extremely difficult to fix the actual damages.

14.6.B Liquidated damages shall be considered not as a penalty but as agreed monetary damage sustained by SMART for increased Project administration expenses, including extra inspection, construction management, architectural and engineering expenses and SMART staffing costs related to the Project and Contract Documents because Contractor failed to perform and complete Work within time fixed for completion or extensions of time allowed pursuant to provisions hereof. Liquidated damages shall not be deemed to include within their scope additional damages or administrative costs arising from Defective Work, lost revenues, interest expenses, cost of completion of the Work, cost of substitute facilities, claims and fines of regulatory agencies, damages suffered by others or other forms of liability claimed against SMART as a result of delay (e.g., delay or delay-related claims of other contractors or subcontractors), and defense costs thereof. Contractor shall be fully responsible for the actual amount of any such damages it causes, in addition to the liquidated damages otherwise due SMART.

14.6.C SMART may deduct from any money due or to become due to Contractor subsequent to time for completion of entire Work and extensions of time allowed pursuant to provisions hereof, a sum representing then-accrued liquidated damages. Should Contractor fall behind the approved Progress Schedule, SMART may deduct liquidated damages based on its estimated period of late completion. SMART need not wait until Final Completion to withhold liquidated damages from Contractor's progress payments. Should money due or to become due to Contractor be insufficient to cover aggregate liquidated damages due, then Contractor forthwith shall pay the remainder of the assessed liquidated damages to SMART.

14.6.D Liquidated Damages for interruption of freight service

14.6.D.1 $204.95 per hour for each hour that freight service is interrupted. The per hour liquidated damage rate will be assessed on an hourly basis for the first eight hours of delay. The per hour rate will be on whole hour increments and is rounded up to the next hour.

14.6.D.2 If freight service is interrupted for more than 8 hours in a given day, a per day liquidated damage assessment of $4,918.89 will apply instead of the per hour liquidated damage rate.

14.7 Differing Site Conditions

14.7.A If Contractor encounters underground conditions that exceed the scope of the Work, Contractor shall promptly give SMART written notice of the condition, and shall give such notice before the conditions are disturbed, to include: (i) material that Contractor believes may be material that is hazardous waste, as defined in Section 25117 of the Health and Safety Code, that is required to be removed to a Class I, Class II, or Class III disposal site in accordance with provisions of existing law, and is not within the scope of Work ("hazardous waste"); (ii) subsurface or latent physical conditions at the site differing from those indicated by information about the Site made available to Bidders prior to the deadline for submitting Bids, that Contractor did not and could not have known about by performing its required pre-Bid investigations; or (iii) unknown physical conditions at the Site of any unusual nature, different materially from those ordinarily encountered and generally recognized as inherent in work of the character provided for the Contract, that Contractor did not and could not have known about by performing its required pre-Bid investigations.

14.7.B SMART shall promptly investigate the underground conditions, and if it finds that (i) the conditions do materially so differ in a manner Contractor did not anticipate and could not have anticipated, or do involve hazardous waste outside the scope of the Work, and (ii) cause a decrease or increase in Contractor's cost of, or the time required for, performance of any part of the Work, then (iii) SMART shall initiate a change order under the procedures described in the contract, including but not limited to, issuing either a Request for Proposal or a Construction Change Directive under the procedures described in the Contract Documents, including without limitation Section 01 25 00 (Clarification and Modification Procedures).

14.7.C If SMART determines that underground conditions at the Site do not materially so differ in a manner Contractor did not anticipate and could not have anticipated, or do not involve hazardous waste outside the scope of the Work, or do not cause a decrease or increase in Contractor's cost of, or the time required for, performance of any part of the Work, or for any other reason that that no change in terms of the Contract Documents is justified, SMART will so notify Contractor in writing, stating reasons.

14.7.D In the event that a dispute arises between SMART and Contractor whether the conditions do materially so differ, or involve hazardous waste, and cause a decrease or increase in Contractor's cost of, or the time required for, performance of any part of the Work, Contractor shall not be excused from any scheduled completion date provided for by the Contract but shall proceed with all Work to be performed under the Contract. Contractor shall retain any and all rights provided either by the Contract or by law which pertain to the resolution of disputes and protests between contracting parties.

14.7.E Contractor shall not be entitled to any adjustment in the Contract Sum or Contract Time regarding claimed hazardous waste or materials, claimed Latent or materially different Site conditions (whether above or below grade) if:

14.7.E.1 Contractor knew of the existence of such conditions at the time Contractor submitted its Bid; or

14.7.E.2 Contractor should have known of the existence of such conditions at the time Contractor submitted its Bid, or should have learned of such conditions and mitigated their impact, as a result of having complied with the requirements of Contract Documents, including without limitation, the investigation requirements herein at Articles 2 and 10 of Document 00 70 00;

14.7.E.3 The information or conditions claimed by Contractor to be Latent or materially different consist of information, conclusions, opinions, or deductions made from underground conditions reports, of the kind that this Document 00 70 00 precludes reliance upon; or

14.7.E.4 Contractor was required to give written notice and failed to do so within the time required.

14.7.F If, because of a differing site condition as defined herein, Contractor does not agree to continue with Work based on a reasonable belief that it is unsafe, or does not agree to resume Work under special conditions, SMART may order the disputed portion of Work deleted from the Work, or performed by others, or SMART may invoke its right to terminate Contractor's right to proceed under the Contract Documents in whole or in part, for convenience or for cause as the facts may warrant. If Contractor does not agree with SMART's determination of any adjustment in the Contract Sum or Contract Time as a result, Contractor may make a claim as provided in Article 12 of this Document 00 70 00.

14.8 Change Orders Related to Underground Facilities

14.8.A If an Underground Facility is uncovered or revealed at or contiguous to the Site which was not shown or indicated in the materials supplied by SMART or in information on file at USA or is not otherwise reasonably known to Contractor by performing its obligations in Articles 2 and 10 of this Document 00 70 00, then Contractor shall, promptly after becoming aware thereof and before further disturbing conditions affected thereby (and in no event later than seven Days), and prior to performing any Work in connection therewith (except in an emergency as required by Article 15 of this Document 00 70 00), identify the owner of such Underground Facility and give written notice to that owner and to SMART. During such time, Contractor shall be responsible for the safety and protection of such Underground Facility.

14.8.B Contractor shall be allowed an increase in the Contract Sum or an extension of the Contract Time, or both, for Underground Facilities either not shown or inaccurately shown in the Contract Documents, the information supplied pursuant to the bidding documents or in information on file at USA, only where the inaccuracy was (i) material and outside of the normal experience on projects of this nature, (ii) was not reasonably inferable from existing information, and (iii) directly results in a material, justifiable and actual increase in the cost of Contractor's work. For example, if surface conditions such as pavement repairs, valve covers, or other markings, indicate the presence of an Underground Facility,

or if the Underground Facility could be determined or its cost impact mitigated by performing the obligations in Articles 2 and/or 10 of this Document 00 70 00, then an increase in the Contract Price or an extension of the Contract Time will not be due, even if the Underground Facility was not indicated or was shown at a different place or a different elevation in the Contract Documents, in the information supplied to Contractor pursuant to the bidding documents, or in information on file at USA.

14.8.C Main Line and Trunk Line Utilities (Government Code Section 4215). Consistent with Government Code Section 4215, as between SMART and Contractor, SMART will be responsible for the timely removal, relocation, or protection of existing main or trunk line utility facilities located on the Site only if such utilities are not identified in the Contract Documents or bidding documents. SMART will compensate for the cost of locating and repairing damage not due to Contractor's failure to exercise reasonable care, removing and relocating such main or trunk line utility facilities not indicated in the Contract Documents or bidding documents with reasonable accuracy, and equipment on the Project necessarily idled during such work.

14.9 Value Engineering

14.9.A The contractor is encouraged to develop, prepare, and submit value engineering change proposals voluntarily. SMART shall share any approved value engineering proposals at a rate of 50% of realized savings to the contractor.

15 WORKING CONDITIONS AND PREVAILING WAGES

15.1 Use Of Site/Sanitary Rules

15.1.A All portions of the Work shall be maintained at all times in neat, clean and sanitary condition. Contractor shall furnish toilets for use of Contractor's and Subcontractors' employees on the Site where needed, and their use shall be strictly enforced. All toilets shall be properly secluded from public observation, and shall be located, constructed, and maintained subject to SMART's approval.

15.1.B Contractor shall confine construction equipment, the storage of materials and equipment and the operations of workers to the Site and land areas identified in and permitted by Contract Documents and other land and areas permitted by applicable laws and regulations, rights of way, permits and easements or as designated by SMART, and shall not unreasonably encumber the premises with construction equipment or other materials or equipment. Contractor shall assume full responsibility for any damage to any such land or area, any improvement located thereon, or to the SMART or occupant thereof resulting from the performance of Work.

15.1.C During the progress of the Work, Contractor shall keep the Site and the Project free from accumulations of waste materials, rubbish and other debris resulting

from the Work. At the completion of the Work, Contractor shall remove all waste materials, rubbish, and debris from and about the Site as well as all tools, appliances, construction equipment and machinery and surplus materials. Contractor shall leave the premises clean and ready for occupancy by SMART at Substantial Completion of Work. Contractor shall restore to original condition all property not designated for alteration by Contract Documents.

15.1.D Contractor shall not load nor permit any part of any structure or pavement to be loaded in any manner that will endanger the structure or pavement, nor shall Contractor subject any part of Work or adjacent property to stresses or pressures that will endanger it. Contractor shall conduct all necessary existing conditions investigation regarding structural, mechanical, electrical or any other system existing, shall perform Work consistent with such existing conditions, and shall have full responsibility for insufficiencies or damage resulting from insufficiencies of existing systems, equipment, or structures to accommodate performing the Work.

15.2 Protection Of Work, Persons, And Property

15.2.A Contractor shall be responsible for initiating, maintaining, and supervising all safety precautions and programs in connection with Work. Contractor shall comply with all safety requirements specified in any safety program established by SMART, or required by state, federal or local laws and ordinances. Contractor shall be responsible for all damage to Work, property or structures, and all injuries to persons, arising from the performance of Work of the Contract Documents.

15.2.B Contractor shall comply with all applicable laws and regulations of any public body having jurisdiction for safety of persons or property or to protect them from damage, injury or loss; and shall erect and maintain all necessary safeguards for such safety and protection. Contractor shall notify owners of adjacent property and of Underground Facilities and utility owners when prosecution of the Work may affect them, and shall cooperate with them in the protection, removal, relocation, and replacement of their property.

15.2.C Contractor shall remedy all damage, injury or loss to any property referred to in paragraph 15.2.A of this Document 00 70 00, caused, directly or indirectly, in whole or in part, by Contractor, any Subcontractor, supplier, or any other person or organization directly or indirectly employed by any of them to perform or furnish any Work or anyone for whose acts any of them may be liable. Contractor's duties and responsibility for safety and for protection of Work shall continue until such time as all the Work is completed and Final Acceptance of the Work. SMART and its agents do not assume any responsibility for collecting any indemnity from any person or persons causing damage to Contractor's Work.

15.2.D Contractor shall designate a qualified and experienced safety representative at the Site whose duties and responsibilities shall be the prevention of accidents and the maintaining and supervising of safety precautions and programs.

15.2.E SMART may, at its option, retain such moneys due under the Contract Documents as SMART deems necessary until any and all suits or claims against Contractor for

injury to persons or property shall be settled and SMART receives satisfactory evidence to that effect.

15.3 Responsibility For Safety And Health

15.3.A Contractor shall ensure that its and each tier of Subcontractors' employees, agents and invitees comply with applicable health and safety laws while at the Site. These laws include the Occupational Safety and Health Act of 1970 and rules and regulations issued pursuant thereto, and SMART's safety regulations as amended from time to time. Contractor shall comply with all SMART directions regarding protective clothing and gear.

15.3.B Contractor shall be fully responsible for the safety of its and its Subcontractors' employees, agents and invitees on the Site. Contractor shall notify SMART, in writing, of the existence of hazardous conditions, property or equipment at the Site that are not under Contractor's control. Contractor shall be responsible for taking all the necessary precautions against injury to persons or damage to the property of Contractor, Subcontractors, or persons from recognized hazards until the responsible party corrects the hazard.

15.3.C Contractor shall confine all persons acting on its or its Subcontractors' behalf to that portion of the Site where Work under the Contract Documents is to be performed, SMART-designated routes for ingress and egress thereto, and any other SMART-designated area. Except those routes for ingress and egress over which Contractor has no right of control, within such areas, Contractor shall provide safe means of access to all places at which persons may at any time have occasion to be present.

15.4 Emergencies

15.4.A In emergencies affecting the safety or protection of persons or Work or property at the Site or adjacent thereto, Contractor, without special instruction or authorization from SMART, is obligated to act to prevent threat and damage, injury or loss, until directed otherwise by SMART. Contractor shall give SMART prompt written notice if Contractor believes that any significant changes in Work or variations from Contract Documents have been caused thereby. If SMART determines that a change in the Contract Documents is required because of the action taken by Contractor in response to such an emergency, a Change Order or Construction Change Directive will be issued to document the consequences of such action.

15.5 Use of Roadways And Walkways

15.5.A Contractor shall not unnecessarily interfere with use of any roadway, walkway, or other facility for vehicular or pedestrian traffic. Before beginning any interference and only with SMART's prior concurrence, Contractor may provide detour, traffic control, or temporary bridge for traffic to pass around or over the interference, which Contractor shall maintain in satisfactory condition as long as interference continues. Unless otherwise provided in the Contract Documents, Contractor shall bear the cost of these temporary facilities.

15.6 Nondiscrimination

15.6.A No person or entity shall discriminate in the employment of persons upon public works because of race, religious creed, color, national origin, ancestry, physical disability, mental disability, medical condition, marital status, sexual preference, or gender of such persons, except as provided in Section 12940 of the Government Code. Every contractor for public works violating the provisions of Section 1735 of the Labor Code is subject to all the penalties imposed for a violation of Chapter 1, Part 7, Division 2 of the Labor Code.

15.7 Prevailing Wages

15.7.A Contractor shall pay to persons performing labor in and about Work provided for in the Contract Documents an amount equal to or more than the general prevailing rate of per diem wages for (i) work of a similar character in the locality in which the Work is performed and (ii) legal holiday and overtime work in said locality. The per diem wages shall be an amount equal to or more than the stipulated rates contained in a schedule that has been ascertained and determined by the Director of the State Department of Industrial Relations and SMART to be the general prevailing rate of per diem wages for each craft or type of workman or mechanic needed to execute this Contract. Contractor shall also cause a copy of this determination of the prevailing rate of per diem wages to be posted at each Site, in addition to all other job site notices prescribed by regulation. Copies of the general prevailing rates of per diem wages for each craft, classification, or type of worker needed to execute the Contract, as determined by Director of the State of California Department of Industrial Relations, are available at SMART's Headquarters Office and are deemed included in the Bidding Documents. Upon request, SMART will make copies available to any interested party. Contractor shall post the applicable prevailing wage rates at the Site.

If this project is funded using Federal dollars and there is a discrepancy between the Federal Wage Determination and the California Prevailing Wage determinations, Contractor shall pay the higher rate.

15.7.B Contractor shall forfeit, as a penalty to SMART, Fifty Dollars ($50.00) for each laborer, workman, or mechanic employed in performing labor in and about the Work provided for in the Contract Documents for each Day, or portion thereof, that such laborer, workman or mechanic is paid less than the said stipulated rates for any Work done under the Contract Documents by him or her or by any Subcontractor under him or her, in violation of Articles 1 and 2 of Chapter 1 of Part 7 of Division II of the California Labor Code. The sums and amounts which shall be forfeited pursuant to this paragraph 15.7.B and the terms of the Labor Code shall be withheld and retained from payments due to Contractor under the Contract Documents, pursuant to this Document 00 70 00 and the Labor Code, but no sum shall be so withheld, retained, or forfeited except from the final payment without a full investigation by either the State Department of Industrial Relations or by SMART. The Labor Commissioner pursuant to Labor Code Section 1775 shall determine the final amount of forfeiture.

15.7.C Contractor shall insert in every subcontract or other arrangement which Contractor may make for performance of Work or labor on Work provided for in the Contract, provision that Subcontractor shall pay persons performing labor or rendering service under subcontract or other arrangement not less than the general prevailing rate of per diem wages for work of a similar character in the locality in which the Work is performed, and not less than the general prevailing rate of per diem wages for holiday and overtime work fixed in the Labor Code.

15.7.D Where either the Prime Agreement or the subagreement exceeds thirty thousand dollars ($30,000), the Contractor and all subcontractors under him or her shall comply with all applicable requirements of Labor Code 1777.5, 1777.6, and 1777.7 in the employment of apprentices. Contractors are required to comply with all Labor Code requirements regarding the employment of apprentices, including mandatory ratios of journey level to apprentice workers. Prior to commencement of work, Contractor and subcontractors are advised to contact the Department of Industrial Relations (DIR) Division of Apprenticeship standards website at https://www.dir.ca.gov/das/ for additional information regarding the employment of apprentices and for the specific journey-to-apprentice ratios for the Work. Contractor is responsible for their compliance and all their subcontractor's compliance with these requirements. Failure to comply will subject the Contractor and subcontractors to the penalties specified in Labor Code §1777.7.

15.7.E Contractor stipulates that it shall comply with all applicable wage and hour laws, including without limitation California Labor Code Sections 1725.5, 1776, 1777, and 1810-1815. Failure to so comply shall constitute a default under this Contract.

15.7.F Contractor and Subcontractors must keep accurate payroll records, showing the name, address, social security number, Work classification, straight time and overtime hours worked each Day and week, and the actual per diem wages paid to each journeyman, apprentice, worker, or other employee employed by him or her in connection with the Work of the Contract documents. Each payroll record shall contain or be verified by a written declaration as required by Labor Code Section 1776.

15.7.G The payroll records enumerated above must be certified and shall be available for inspection at all reasonable hours at the principal office of Contractor as required by Labor Code Section 1776.

15.7.H Contractor shall inform SMART of the location of records enumerated above, including the street address, city and SMART, and shall, within five working Days, provide a notice of a change of location and address.

15.7.I Contractor or Subcontractor has 10 Days in which to comply subsequent to receipt of a written notice requesting the records enumerated above. In the event that Contractor or Subcontractor fails to comply with the ten-Day period, he or she shall, as a penalty to SMART on whose behalf the contract is made or awarded, forfeit $25.00 for each calendar Day, or portion thereof, for each

worker, until strict compliance is effectuated. Upon the request of the Division of Apprenticeship Standards or the Division of Labor Standards Enforcement, these penalties shall be withheld from progress payments then due. Contractor is not subject to a penalty assessment pursuant to this subparagraph due to the failure of a Subcontractor to comply with this subparagraph.

15.7.J This project is subject to compliance monitoring and enforcement by the Department of Industrial Relations. Contractor shall require all subcontractors to furnish the records specified in Labor Code section 1776 (e.g. electronic certified payroll records) directly to the Labor Commissioner in a format prescribed by the Labor Commissioner at least monthly.

15.7.K Contractor and all Subcontractors shall be registered and qualified to perform public work pursuant to Labor Code section 1725.5 as a condition to engage in the performance of any Work hereunder.

15.7.L Contractor shall also deliver certified payrolls to SMART with each Application for Payment as described in Section 01 20 00 (Price and Payment Procedures).

15.8 Environmental Controls

15.8.A Contractor shall comply with all rules, regulations, ordinances, and statutes that apply to any Work performed under the Contract Documents including, without limitation, any toxic, water, and soil pollution controls and air pollution controls specified in Government Code Section 11017. Contractor shall be responsible for insuring that Contractor's Employees, Subcontractors, and the public are protected from exposure to airborne hazards or contaminated water, soil, or other toxic materials used during or generated by activities on the Site or associated with the Project.

15.9 Shoring Safety Plan

15.9.A At least five Days in advance of excavating any trench five feet or more in depth, Contractor shall submit to SMART a detailed plan showing the shoring, bracing and sloping design and other provisions to be made for worker protection from the hazard of caving ground during the excavation, as required by Labor Code Section 6705. A civil or structural engineer registered in California shall prepare and sign any plan that varies from the shoring system standards established by the State Construction Safety Orders.

15.9.B During the course of Work, Contractor shall be responsible for determining where sloping, shoring, and/or bracing is necessary and the adequacy of the design, installation, and maintenance of all shoring and bracing for all excavation, including any excavation less than five feet in depth. Contractor will be solely responsible for any damage or injuries that may result from excavating or trenching. SMART's acceptance of any drawings showing the shoring or bracing design or work schedule shall not relieve Contractor of its responsibilities under this subparagraph.

15.9.C Cal/OSHA Permit. Contractor shall comply with Labor Code 6500 and shall obtain, as applicable, a permit as required by Cal/OSHA for each of the following:

15.9.D Construction of trenches or excavations that are five feet or more in depth and into which a person is required to descend.

15.9.E Construction or demolition of any building, structure, or scaffolding for falsework more than three stories high, or the equivalent height (36 feet).

15.9.F Erection or dismantling of vertical shoring systems more than three stories high, or the equivalent height (36 feet).

15.9.G The underground use of diesel engines in mines or tunnels.

END OF DOCUMENT

ATTACHMENT C

GENERAL REQUIREMENTS

BRAZOS RAILROAD TIMBER BRIDGE REPAIRS
PHASE 2

MP B26.26, B34.22 & MP B37.76

CONTRACT NO. FR-BB-25-001

(THIS PAGE IS LEFT INTENTIONALLY BLANK)

Table of Contents

SECTION 01 11 00 SUMMARY OF WORK 1

SECTION 01 14 13 ACCESS TO SITE 5

SECTION 01 20 00 PRICE AND PAYMENT PROCEDURES 10

SECTION 01 25 00 CLARIFICATION AND MODIFICATION PROCEDURES 17

SECTION 01 31 19 PROJECT MEETINGS 27

SECTION 01 32 16 PROGRESS SCHEDULES AND REPORTS 31

SECTION 01 32 33 PHOTOGRAPHIC DOCUMENTATION 56

SECTION 01 33 00 SUBMITTAL PROCEDURES 59

SECTION 01 33 23 SHOP DRAWINGS, PRODUCT DATA, AND SAMPLES 66

SECTION 01 35 14 OPERATING SYSTEM INTERFACE 72

SECTION 01 35 24 CONSTRUCTION SAFETY 74

SECTION 01 41 00 REGULATORY REQUIREMENTS 80

SECTION 01 42 19 REFERENCE STANDARDS 84

SECTION 01 43 00 QUALITY ASSURANCE 89

SECTION 01 43 38 FIELD SAMPLES AND MOCK-UPS 90

SECTION 01 45 00 CONSTRUCTION QUALITY CONTROL 93

SECTION 01 45 24 TESTING PROGRAM REQUIREMENTS 101

SECTION 01 51 00 TEMPORARY UTILITIES 102

SECTION 01 52 00 CONSTRUCTION FACILITIES 104

SECTION 01 57 00 TEMPORARY CONTROLS 109

SECTION 01 58 00 PROJECT IDENTIFICATION 118

SECTION 01 60 00 PRODUCT REQUIREMENTS 120

SECTION 01 64 13 DISTRICT - FURNISHED MATERIALS EQUIPMENT 123

SECTION 01 71 13 MOBILIZATION 124

SECTION 01 71 23 FIELD ENGINEERING 127

SECTION 01 74 14 CLEANING 130

SECTION 01 74 21 WASTE MANAGEMENT 132

SECTION 01 77 00 CLOSEOUT PROCEDURES 136

SECTION 01 78 23 OPERATION AND MAINTENANCE DATA 139

SECTION 01 78 39 PROJECT RECORD DOCUMENTS 140

SECTION 01 78 44 SPARE PARTS AND MAINTENANCE MATERIALS 146

SECTION 01 79 00 DEMONSTRATION AND TRAINING 150

SECTION 01 11 00 SUMMARY OF WORK

PART 1— GENERAL

1.1 SECTION INCLUDES

A. This section includes a summary of Work and Work restrictions including:

1. Work Covered by Contract Documents
2. Work Under Other Contracts
3. Hours Of Work and Notification of Adjacent Residents
4. Partial Occupancy/Utilization Requirements
5. Bid Items
6. Contract Time
7. Freight Service Delays
8. Roadway Worker Protection (RWP) Training
9. Required Submittals

1.2 WORK COVERED BY CONTRACT DOCUMENTS

A. Work as described in the bid solicitation documents. Unless provided otherwise in the Contract Documents, all risk of loss to Work covered by Contract Documents shall rest with Contractor until Final Acceptance of the Work. The cost of maintenance and operation of systems and equipment prior to Final Acceptance will be considered as included in the prices bid and no direct or additional payment will be made to Contractor.

B. Repair of existing timber railroad bridges on the SMART Brazos Junction as described in the Scope of Work portion of the bid documents, and in the Plans & Technical Specifications. Work will include replacing stringers, ties, framing bents, repairing piles, walkway removal, and disposal of material. Metal grating walkways that are removed shall be delivered to the SMART Schellville Yard for reuse.

C. Construction will occur during active freight rail service. Therefore, railroad protection training provided by SMART and railroad insurance are required.

D. Environmental permits are not required for this work as it is repair work to existing structures.

1.3 WORK UNDER OTHER CONTRACTS

A. Contractor shall coordinate with SMART, and other contractors and forces, as required by Document 00 70 00 (General Conditions), paragraph 6. Contractor shall coordinate the work with SMART train operations.

1.4 HOURS OF WORK AND NOTIFICATION OF ADJACENT RESIDENTS

A. Prior to starting construction, SMART will notify adjacent residents of the proposed construction schedule if deemed necessary.

   1. Outdoor construction activity, except for emergency situations or optional track work, will be confined to Monday through Friday, between the hours of 7:00 a.m. through 6:30 p.m.

   2. Contractor may request additional work hours as needed and obtain approval from SMART Engineer with at least forty-eight (48) hours prior notification.

1.5 PARTIAL OCCUPANCY/UTILIZATION REQUIREMENTS

A. Contractor shall allow SMART to take possession of and use any completed or partially completed portion of the Work during the progress of the Work as soon as is possible without interference to the Work.

B. Possession, use of Work, placement, and installation of equipment by SMART or SMART contractor shall not evidence the completion of the Work or any part of it. Contractor shall not be held responsible for damage to the occupied part of the Work resulting from SMART occupancy. Use and occupancy by SMART prior to acceptance of Work does not relieve Contractor of its responsibility to maintain insurance and bonds required under the Contract until entire Work is completed and accepted by SMART Engineer.

C. Responsibility for the operation and maintenance of said equipment shall remain with Contractor. Contractor shall make, and SMART shall certify, an itemized list of each piece of equipment so operated with the date operation commences. The itemized list noted above shall be the basis for the commencement of the warranty period for equipment.

D. Prior to date of Final Acceptance of the Work by SMART, all necessary repairs or renewals in Work or part thereof so used, not due to ordinary wear and tear, but due to Defective materials or workmanship or to operations of Contractor, shall be made at expense of Contractor, as required in Document 00 70 00 (General Conditions).

E. Use by SMART of Work or part thereof as contemplated by this Section 01 11 00 shall in no case be construed as constituting acceptance of Work or any part thereof. Such use shall neither relieve Contractor of any responsibilities under the Contract, nor act as a waiver by SMART of any of the conditions thereof.

1.6 BID ITEMS

A. Bid Items shall include all mobilization & de-mobilization for equipment, material, and personnel and shall include waste disposal.

B. Bid Item 1 - Bridge Repair MP B26.26 Novato Creek

1. All work and hardware to remove and replace six (6) each, new owner-supplied timber stringers

C. Bid Item 2 - Bridge Repair MP B34.22 Sears Point

1. All work and hardware to remove and replace thirty six (36) each, new owner-supplied timber ties. Work includes removing existing bridge walkway and delivering metal grating walkway material to SMART yard for reuse.

D. Bid Item 3 - Bridge Repair MP B37.76 Wingo (Base Work includes 2 Stringers)

1. All work and hardware to repair timber bents, replace two (2) each stringers, and repair timber sway bracing.

E. Bid Item 4 - Bridge Repair MP B37.76 Wingo (Install additional 30 stringers)

1. All work and hardware to remove and replace additional thirty (30) each, owner-supplied timber stringers.

1.7 Contract Time

A. Substantial Completion

1. Substantial Completion shall be within 150 calendar days from the date of NTP issuance

2. Full Project Completion shall be within 180 calendar days from the date of NTP issuance

1.8 Freight Service Delays

A. Contract work shall not interfere with freight traffic, typically operated on Tuesdays and Thursdays. Contractor shall coordinate schedules with Freight Manager Jon Kerruish (707) 285-8252 to avoid delays to freight traffic. Liquidated damages per General Conditions 14.6 Liquidated Damages may be applied for unnecessary delays.

1.9 ROADWAY WORKER PROTECTION (RWP) TRAINING

A. Construction work will be performed within an active railroad right-of-way.

1. Contractor's employees and subcontractor's employees who will be working onsite must complete the railroad operations and safety training before being permitted to work within the railroad right of way. The cost of the training is approximately $30.00 per person and is available online. No additional payment shall be made for RWP training and cost shall be included in Mobilization.

1.10 REQUIRED SUBMITTALS

A. Submittals required per this document (General Requirements):

01 35 24 Safety Representative's resume

01 35 24 Contractor's Safety Program

01 35 24 Emergency Procedures

01 45 00 Construction Quality Control Representative

END OF SECTION 01 11 00

SECTION 01 14 13 ACCESS TO SITE

PART 1— GENERAL

1.1 SECTION INCLUDES

A. This section sets forth the minimum requirements for traffic routing and traffic control during construction of the Project.

   1. Furnish and install all temporary construction signs, traffic control devices, and pedestrian protection as required by SMART for safe and convenient routing of vehicular and pedestrian traffic at the Project site.

1.2 ACCESS REQUIREMENTS

A. The following access and egress restrictions will apply:

   1. Contractor, or Subcontractors as required, shall secure a Right of Way Access Permit from the SMART Operations/Maintenance of Way Department prior to entering the SMART right-of-way.

      a. Right of Entry Application shall be submitted two (2) weeks prior to work beginning.

      b. Right of Way Access Permits shall be submitted weekly on Friday covering the scope for the following week's work.

      c. The fee shall be waived for contractors working for SMART.

      d. Certificate of insurance is required for all contractors and subcontractors prior to issuance of Right of Way Access Permit. Please see 00 52 00 Agreement for specific insurance requirements.

   2. Contractor shall not block access to fire hydrants or standpipe connections at any time.

   3. Contractor shall not block access along the main road entry to the San Rafael Airport property. Single lane closures with appropriate flagging will be allowed only.

B. Contractor shall notify SMART, appropriate governmental agencies, and adjacent property owners a minimum of fourteen (14) calendar days prior to performing Work which necessitates closing or interfering with traffic on public and private thoroughfares, parking areas, driveways, and sidewalks.

C. Contractor shall obtain all necessary and required permits for completion of this project. Except as noted, all permits issued by SMART will be issued at no cost to Contractor; all other required permits shall be obtained at Contractor’s expense.

1. Obtain local agency encroachment permit(s) as required to conduct the work.

2. Obtain written permission from SMART prior to effecting such closures and interruptions.

3. Provide protection for pedestrians as required by SMART and local agencies.

D. Contractor may request temporary access to move equipment into and out of the work area from the west side of the track with appropriate track protection after SMART's revenue service between the hours of 8:30 p.m. and 4:00 a.m.

1. An access Plan must be submitted to SMART for approval that describes the desired access with specific details of how, what, where and when. Sufficient track protection will be required to fully protect the rails, ties and track embankment.

2. This temporary access is intended to facilitate the staging of equipment and materials for the pedestrian bridge construction. It's use will be very limited and will not serve as on-going access during construction. Access will not be granted throughout the entire construction and is not intended to be a construction access point.

3. Contractor shall remove the temporary access by 4:00 a.m.

4. SMART personnel is required to be on site during the construction, use, and removal of the temporary access.

1.3 TRAFFIC REQUIREMENTS

A. General: Contractor shall adequately safeguard the general public and the work by furnishing, installing, and maintaining temporary signs, runway, bridge, guardrails, fences, and other facilities as necessary, or required, under the Contract Documents. Contractor shall provide, modify, and maintain proper barriers and enclosures for the protection of vehicular and pedestrian traffic, as required in Section 01 14 13. Such protection measures for traffic specified in Section 01 14 13 shall be incorporated in the Traffic & Pedestrian Safety Plan Control Plan.

B. Traffic control: Traffic control for all areas outside of the SMART Right of Way shall be subject to permits and requirements of the appropriate local agency.

C. Contractor shall obtain daily Track Access Permits from SMART Operations & Maintenance of Way, including Traffic Control & Pedestrian Safety Plan to SMART, and to local Agency as required for approval, and shall obtain and pay for necessary permits as required to conduct the Work.

1. Under General Conditions, Contractor shall conduct operations and activities within area shown on Drawings; exceptions may be granted, for special activities, if deemed justified and appropriate as long as mitigation measures are implemented.

2. During the construction period, construction truck movement shall be minimized on weekdays during peak hours to minimize traffic conflicts.

D. Special Instruction to Contractor:

1. Contractor shall coordinate, schedule, and perform work in consideration with property owners in area.

2. Contractor shall pay for the costs of temporary signing, striping changes, and other Traffic Control & Pedestrian Safety Plan related changes.

3. Contractor shall provide trained flaggers to control construction traffic where traffic crosses at railroad crossings or as otherwise required and as needed or directed by SMART for track safety. This must be coordinated with SMART.

E. Maintenance of Traffic Signs, Signals and Pedestrian Signal Operation: Existing traffic signals shall be always maintained and visible to motorists approaching intersections and to pedestrians using crosswalks.

1. Any required traffic signal shutdown, obstruction of traffic control signage, demolition operations, equipment, materials, or fences that may interfere with traffic shall require prior approval by SMART and other regulatory agencies.

F. Prohibition of Wrong Way Traffic Through Railroad Grade Crossing Gates.

1. Traffic shall not be allowed to divert into the oncoming lane around railroad safety gates unless SMART flaggers control traffic at the crossing, including construction equipment.

G. Prohibition of Stopping: Contractor may prohibit stopping in parking lanes where and when necessary, as approved under the Traffic Control & Pedestrian Safety Plan to gain access to Work and to provide required traffic lanes.

1. Contractor shall notify SMART of approved prohibition of parking and stopping, at least 72 hours in advance of effective date and time.

2. Contractor shall obtain the necessary local agency approval and permits.

3. Contractor shall provide, spaced every 25 feet, signs on type II barricades.

a. Contractor shall post required "TOW-AWAY" signs at least 72 hours in advance of effective date and time.

b. The effective dates, times, and name of Contractor and telephone number shall be shown on all signs.

c. Contractor shall maintain signs on a continual basis and shall replace damaged and missing signs daily.

d. Contractor shall remove signs and mounting materials when construction activities are completed.

H. Mass Transit Vehicles: Contractor shall not prevent the functional operation of mass transit vehicles at any time. Lanes made available for traffic shall be located to include an adequate and allowable travel path for coach lines.

1. Contractor's activity shall not preclude provisions of minimum turning radius for mass transit vehicles.

1.4 SUBMITTALS

A. Traffic Control & Pedestrian Safety Plan: Contractor shall submit proposed Traffic Control & Pedestrian Safety Plan to SMART for review and approval and shall perform work in accordance with approved plans.

1. Plan shall show:

   a. Sequence of operations, demolition, and excavation phasing.

   b. Time required for each phase of Work including beginning and ending dates.

   c. Movement, parking and stacking of trucks hauling materials to and from demolition area.

   d. Any proposed traffic lane closures and transitions.

   e. Location and layout of traffic cones, signing, and barricades as necessary to provide and maintain the specified number and width of vehicular lanes and pedestrian walkways.

   f. Location and details of trench protection/construction area using Type II and/or Type III barricades, k-rails, etc.

   g. Proposed changes (removals, relocation, or temporary installation) of:

      (i) Traffic signals and controllers.

      (ii) Street and safety lighting standards.
      (iii) Traffic signs.

      (iv) Barricades, fence, and k-railing.

      (v) Temporary roadway striping.

      (vi) Flashing arrow signs.

      (vii) Other signs and directional devices.

2. Temporary detour signing, striping and temporary traffic signals shall be furnished, installed, and maintained by Contractor.

   a. Traffic routing provisions shall not be construed as preventing Contractor from proceeding with mobilization of plant and equipment and placing orders for materials upon receipt of Notice to Proceed, nor shall Contractor be entitled to any delays or compensation due to "DISAPPROVED" Traffic Control & Pedestrian Safety Plans.

1.5 QUALITY ASSURANCE

A. Signs and equipment shall conform to requirements of "California Manual on Uniform Traffic Control Devices (MUTCD)" published by the State of California Department of Transportation, most current revision; SMART standards, and other Local Agencies having jurisdiction.

B. Traffic Control and Pedestrian Safety Plan(s) shall be prepared by competent persons.

END OF SECTION 01 14 13

SECTION 01 20 00 PRICE AND PAYMENT PROCEDURES

PART 1— GENERAL

1.1 SECTION INCLUDES

A. This section includes specifications for measurement and payment as they apply to the Work and provisions applicable to lump sum prices, unit prices, and provisional sums, as indicated.

B. Measurement methods specified in the individual Sections of these Specifications shall govern if they differ from methods specified in this Section.

1.2 SUBMITTALS

A. Equipment and Labor Rate Sheet: Submit an Equipment Rate Sheet and a Labor Rate Sheet listing the base hourly labor wage and fringe benefit rates to be used to compensate labor employed to do the Work.

B. Quantity Verification Sheets (QV's): Submit QVs for all items of work installed for payment.

C. Weight Slips and Summary Weigh Sheets: Submit weight slips and daily summary weigh sheets for all materials weighed on scales furnished by Contractor.

D. Monthly Update Report: Submit progress payment requests for Work performed as part of the Monthly Update Report.

E. Force Account Work Invoices: Submit invoices and daily timesheets for extra work performed or materials furnished and stored for use in the Work for the period of work performed.

1.3 LUMP-SUM MEASUREMENT

A. Lump-sum measurement will be for the entire item, unit of work, structure, or combination thereof, as specified and as indicated in the Bid Schedule of the Bid Form.

B. If Contractor requests progress payments for lump-sum items or amounts in the Bid Schedule, such progress payments will be prepared by Contractor and submitted to the District's Engineer for approval. Such a request may require modifications during the Contract, as determined by the District's Engineer.

C. A program for each applicable lump-sum item shall show fixed definable and measurable quantities where possible and unit prices therefore as developed and assigned by Contractor to the distinctive features of the work and major subdivisions thereof. The summation of extensions of quantities and unit prices and related costs shall equal the amount of the lump-sum Contract Price or lump sum bid item indicated in the Bid Schedule.

D. Following the District's Engineer's approval, progress payments will be made in accordance with the agreed upon value, reflecting the progress which occurred during the payment period as approved by the District's Engineer.

E. Under no circumstances will a single item or unit of work be paid for more than once.

1.4 MEASUREMENT OF QUANTITIES FOR UNIT PRICES

A. MEASUREMENT STANDARDS:

1. All work to be paid for at a Contract price per unit measurement, as indicated in the Bid Schedule, will be measured by the District's Engineer in accordance with United States Standard Measures.

2. A ton shall consist of 2,000 pounds U.S. Customary Units.

B. MEASUREMENT BY WEIGHT:

1. Reinforcing steel, steel shapes, castings, miscellaneous metal, metal fabrications, and similar items to be paid for by lump sum .

2. Unless shipped by rail, material to be measured and paid for by weight shall be weighed on sealed scales regularly inspected by the State Division of Measurement Standards or its designated representative, furnished by and at the expense of Contractor. All weighing, measuring, and metering devices shall be suitable for the purpose intended and shall conform to the tolerances and specifications as outlined in the California Code of Regulations, Title 4, Chapter 9, Division 5.

3. Provide or utilize platform scales of sufficient size and capacity to permit the entire vehicle or combination of vehicles to rest on the scale platform while being weighed. Combination vehicles may be weighed as separate units, provided they are disconnected while being weighed. Scales shall be inspected and certified as often as the District's Engineer may deem necessary to ascertain accuracy. Costs incurred as a result of regulating, adjusting, testing, inspecting, and certifying scales shall be borne by Contractor.

4. A licensed weighmaster shall weigh all materials on scales furnished by Contractor. The District's Engineer may be present to witness the weighing and to check and compile the daily record of such scale weights. In any case, the District's Engineer will require that Contractor furnish weight slips and daily summary weigh sheets. In such cases, furnish a duplicate weight slip or a load slip for each vehicle weighed and deliver the slip to the District's Engineer at the point of delivery of the material.

5. If the material is shipped by rail, the certified car weights will be accepted, provided that only actual weight of material will be paid for and not minimum car weights used for assessing freight tariff. Car weights will not be acceptable for material to be passed through mixing plants. Material to be measured by weight shall be weighed separately for each bid item under which it is to be paid.

6. Trucks used to haul material being paid for by weight shall be weighed empty daily and at such additional times as the District's Engineer may require. Each truck shall bear a plainly legible identification mark. The District's Engineer may require the weight of the material verified by weighing empty and loaded trucks on such other scales as the District's Engineer may designate.

C. MEASUREMENT BY VOLUME:

1. Measurement by volume will be by the cubic dimension indicated in the Bid Schedule. The method of volume measurement will be by the unit volume in place or removed as described in the Contract Documents or as specified.

2. When material is to be measured and paid for on a volume basis and it is impractical to determine the volume by the specified method of measurement, or when requested by Contractor in writing and accepted by the District's Engineer in writing, the material may be weighed in accordance with the requirements specified for weight measurement. Such weights will be converted to volume measurement for payment purposes. Factors for conversion from weight measurement to volume measurement will be determined by the District's Engineer and shall be agreed to by Contractor before such method of measurement of pay quantities is accepted.

D. MEASUREMENT BY AREA:

1. Measurement by area will be by the square dimension described in the Contract Documents or as specified. Method of square measurement will be as specified.

E. LINEAR MEASUREMENT:

1. Linear measurement will be by the linear dimension listed or indicated in the Bid Schedule. Unless otherwise indicated, items, components, or work to be measured on a linear basis will be measured at the centerline of the item in place.

1.5 VALUES OF UNIT PRICES

A. The number of units and quantities contained in the Bid Schedule as estimated quantities are approximate only, and final payment will be made for the actual number of units and quantities that are incorporated in the Work and required by the Contract, as measured by the District's Engineer.

1.6 FIELD MEASUREMENT FOR PAYMENT

A. Measurements. Contractor shall perform all measurements by providing all equipment, workers, and survey crews as required to measure quantities in accordance with the provisions for measurement specified herein. Upon review of Contractor's measurements, the District's determination of measurement shall be final.

B. Unless otherwise specified, all quantities shall be calculated using dimensions described in the Contract Documents. No allowance will be made for specified tolerances.

C. Quantity Verification. Submit Quantity Verification Sheets (QV's) to the District's Engineer for all items of work installed for payment. Where practical and agreed to by the District's Engineer, the quantities shall be measured at the close of the pay period. Work that will be covered up and therefore impractical to measure at the pay period's close shall be measured before it is covered.

1. Appropriate Contract Drawings shall be attached to the QV's showing measured quantities as it relates to stationing, locations, and other information.

2. Quantities calculated from cross sections, drawings, or other plans shall be submitted with all such work sheets included with the QVs.

3. The District's Engineer shall be notified before all measurements are taken so that the District's Engineer representative can witness them. If Contractor fails to notify the Resident District's Engineer prior to measurement and the work is covered before the Resident District's Engineer can verify measurement, Contractor shall provide proof that the measurements are accurate by either submitting the raw data used to complete the measurement, or Contractor shall expose the Work to permit the Resident District's Engineer to verify the measurement.

4. The QVs shall be signed by a representative of Contractor and countersigned by the CQC Manager and shall be verified as correct and installed according to the Contract Documents.

D. Verification. District's Engineer will verify the computed quantities of Work performed and submitted by Contractor, and of materials and equipment delivered to the site, for payment purposes.

1.7 CONTRACT PAYMENTS

A. Mobilization and Demobilization Payments: Contractor may request payment for up to 60% of Mobilization bid item to mobilize onto the jobsite at the beginning of the work. This may be in lump sums or invoiced over the course of the work and shall be based on approximate percent complete. 40% of the Mobilization bid item will be retained until the end of the work for de-mobilizing from the site, of which 10% will be retained until the punch list is completed and all material and equipment is removed from the site.

B. Progress Payments: The Monthly Update Report, including progress report, quantity verification, and requirements of this section shall constitute Contractor's submittal for Progress Payment. No payment shall be due to Contractor if the Monthly Update Report is not submitted complete and in accordance with the Contract Requirements.

C. Progress Payments for Work Completed: Not more than once each month Contractor shall submit to the District's Engineer a Progress Payment Request for work performed or completed on forms supplied by or as required by the District's Engineer and these specifications. The payment request shall be certified and shall be supported by evidence as required by the District's Engineer, that the work invoiced has been completed, and that the materials listed are at the storage places indicated.

D. Payment Request for Stored Materials: Unless otherwise specified in the Contract Specifications, partial payments for Contractor-furnished materials not yet installed will be made only after such

materials have been furnished and stored for use in the Work, provided they are stored in an area approved by the District's Engineer. All such material shall be covered by insurance. Said invoice may include the amount and value of such acceptable material as has been furnished and delivered to the site, and such acceptable material as has been furnished and stored for use in the Work, provided it is segregated and designated for exclusive use of the District.

E. Cost Determination: The cost of invoiced materials shall be determined in accordance with General Conditions Article GC9.3.1.2, Materials. Invoices from suppliers shall be furnished to substantiate the cost.

F. A Monthly Update Report shall be prepared by Contractor in accordance with Section 01 32 16 – Progress Schedules and Reports.

1. Submit a draft Monthly Update Report to the District.

    a. Field measurement for payment shall be performed and determined in accordance with Section 01 20 00 – Price and Payment Procedures. Contractor shall provide completed Quantity Verification Sheets for review at the meeting.

    b. The District will provide written comments and determinations on progress within 3 working days after receipt. Contractor shall incorporate the District's determination on progress into the Monthly Update Report.

    c. The District's determination on progress for measurement and payment shall be final. Contractor shall incorporate the District's accepted progress into the payment request. No payment of quantities or percent complete will be provided beyond that accepted by the District.

2. After reviewing job progress status, submit the Monthly Update Report to the District within 5 working days after the date the District responds to the draft Monthly Update Report.

3. Within 14 Working Days after receipt of the Monthly Update Report, the District will either accept or reject it.

    a. If accepted, the progress shown in the monthly update will be the basis for Contractor's application for payment. The accepted monthly update report shall serve as Contractor's Payment Request.

    b. If rejected, the update shall be corrected and resubmitted by Contractor with a corrected Payment Request.

    c. Should Contractor request payment in an amount greater than that accepted by the District, the District will at its sole discretion correct Contractor's Payment Request to the District accepted amount and provide payment on that basis. Contractor shall reflect any such correction in the next Monthly Update Report.

G. Support payment requests with the following supporting documentation:

1. Documentary evidence of commitment of funds such as firm orders, Contracts, invoices, records of expenditure.

2. A certificate from Contractor that the items for which payment is requested are acquired solely for the execution of this Contract and are free from all encumbrances.

3. An agreement that the items will be adequately maintained and will not be removed from the Work Site until all Work is complete.

4. Quantity Verification Sheets.

5. The Monthly Update Report and Payment Request in accordance with Section 01 32 16 – Progress Schedules and Reports.

H. Full Compensation:

1. Payment will be full compensation for furnishing all labor, materials, tools, equipment, transportation, facilities, services, and incidentals, as specified in General Conditions Article GC9.1 for performing all work necessary for completing the construction or installation of the item or work classification.

2. Whenever it is specified or indicated in the Contract Documents that Contractor is to perform work or furnish materials for which no price is fixed in the Contract, it is understood and agreed that there is included in each lump-sum price bid, or unit price bid, the entire cost of the Work, including all items of work which are incidental to the completion of those portions of the work covered by such lump-sum price bid, or unit price bid, or, if not directly incidental to any specific Bid Item in the Bid Schedule, the cost thereof has been distributed among those Bid Items in the Bid Schedule considered most appropriate by Contractor.

3. Work which is not clearly delineated in the Contract Documents to be under a particular Bid Item in the Bid Schedule shall be automatically assigned to one of the lump-sum Construction items in the Bid Schedule by Contractor, so that all items of work, regardless of their characteristics or anonymity, are included in the Contract Price. Additional compensation will not be made for work items which do not clearly fall under listed Bid Items in the Bid Schedule.

1.8 ALLOWANCE

A. Allowance for Time: As defined in the General Conditions.

B. Allowance for Work: Bid item allowance work shall be authorized by SMART prior to the commencement of work activities. The allowance process shall include contractor cost proposal submittal with estimated cost and scope changes for approval from SMART engineer.

1.9 FORCE ACCOUNT WORK

A. Force account work shall be paid for using Daily Report Sheets provided on forms provided by the District's Engineer. The forms shall not be considered for payment if not completed in full upon submittal.

1.10 REJECTED, EXCESS, OR WASTED MATERIALS

A. Quantities of material wasted or disposed of in a manner not called for under the Contract; rejected loads of material, including material rejected after it has been placed by reasons of the failure of Contractor to conform to the provisions of the Contract; material not unloaded form the transporting vehicle; material placed outside the lines indicated on the Contract Drawings or established by the District's Engineer; or material remaining on hand after completion of the Work, will not be paid for, and such quantities shall not be included in the final total quantities. No additional compensation will be permitted for loading, hauling, and disposing of rejected material.

PART 2 — PRODUCTS

Not Used

PART 3 — EXECUTION

Not Used

END OF SECTION 01 20 00

SECTION 01 25 00 CLARIFICATION AND MODIFICATION PROCEDURES

PART 1 GENERAL

1.1 SECTION INCLUDES

A. This section includes a description of general procedural requirements for clarifications, alterations, modifications, and extras.

1.2 GENERAL

A. Any change in scope of Work or deviation from Contract Documents including, without limitation, extra Work, or alterations or additions to or deductions from the original Work, shall not invalidate the original Contract, and shall be performed under the terms of the Contract Documents.

B. Only Contractor or SMART may initiate changes in scope of Work or deviation from Contract Documents.

C. Contractor may initiate changes by submitting Requests for Information (RFIs).

D. RFIs shall be submitted to seek clarification of or to request changes in the Contract Documents.

E. RFIs related to concealed or unknown conditions shall be submitted in accordance with Document 00 70 00 (General Conditions).

F. RFIs related to hazardous waste conditions shall be submitted in accordance with Document 00 70 00 (General Conditions).

G. Contractor shall be responsible for its costs to implement and administer RFIs throughout the Contract duration, regardless of the number of RFIs submitted. Contractor shall be responsible for both SMART and its Architect's, Engineer's, and Consultant's administrative costs for answering RFIs where the answer could be found by reviewing the Contract Documents, as determined by SMART; at SMART's discretion, such costs may be deducted from progress payments or final payment.

H. SMART may initiate changes in the Work or Contract Time by issuing RFPs to Contractor. Such RFPs will detail all proposed changes in the Work and request a quotation of changes in Contract Sum and Contract Time from Contractor.

I. SMART may also, by Construction Change Directive ("CCD"), order changes in the Work within the general scope of the Contract consisting of additions, deletions, or other revisions, the Contract Sum and Contract Time being adjusted accordingly. A CCD shall be used in the absence of total agreement on the terms of a Change Order.

1.3 PROCEDURES

A. Cost Proposal and Procedures: Whenever Contractor is required in this Section 01 25 00 to prepare a Cost Proposal, and whenever Contractor is entitled to submit a Cost Proposal and elects to do so, Contractor shall prepare and submit to SMART for consideration a Cost Proposal using the form attached to this Section 01 25 00. All Cost Proposals must contain a complete breakdown of costs of credits, deducts, and extras; itemizing materials, labor, taxes, overhead, and profit; as well as the cost of bonds and insurance. The cost of bonds and insurance shall not be more than 2% of the total cost of materials, labor, taxes, overhead, and profit. All Subcontractor Work shall be so indicated. Individual entries on the Cost Proposal form shall be determined as provided in paragraphs 1.4 and 1.5 of this Section 01 25 00. After receipt of a Cost Proposal with a detailed breakdown, SMART will act promptly thereon.

B. If SMART accepts a Cost Proposal, SMART will prepare Change Order for SMART and Contractor signatures.

C. If the Cost Proposal is not acceptable to SMART because it does not agree with cost and/or time included in the Cost Proposal, SMART will submit in a response what it believes to be a reasonable cost and/or adjustment, if any. Except as otherwise provided in Section 01 25 00, Contractor shall have seven (7) Days in which to respond to SMART with a revised Cost Proposal.

D. When the necessity to proceed with a change does not allow SMART sufficient time to conduct a proper check of a Cost Proposal (or revised Cost Proposal), SMART may issue CCD ordering Contractor to proceed on the basis to be determined at the earliest practical date. In this event, value of change, with corresponding equitable adjustment to the Contract, shall not be more than the increase or less than the decrease proposed.

E. RFI Procedures: Whenever Contractor requires information regarding the Project or Contract Documents or receives a request for information from a Subcontractor, Contractor may prepare and deliver an RFI to SMART. Contractor shall use the RFI format provided by SMART. Contractor must submit time critical RFIs at least thirty (30) days before the scheduled start date of the affected Work activity. Contractor shall reference each RFI to an activity of the Progress Schedule and shall note the time criticality of the RFI, indicating the time in which a response is required. Contractor's failure to reference RFI to an activity on the Progress Schedule and note time criticality on the RFI shall constitute Contractor's waiver of any claim for time delay or interruption to the Work resulting from any delay in responding to the RFI.

    1. SMART will respond within ten (10) Days from receipt of the RFI with a written response to Contractor. Additionally, SMART may return RFI to Contractor requesting additional information from Contractor should original RFI be inadequate in describing condition. Contractor shall distribute response to all appropriate Subcontractors.

    2. If Contractor is satisfied with the response and does not request change in Contract Sum or Contract Time, then the response shall be executed without a change.

    3. If Contractor believes the response is incomplete, Contractor shall issue another RFI (with the same RFI number with the number .1 indicating if it is a follow-up RFI) to SMART clarifying original RFI.

4. If Contractor believes that the response results in change in Contract Sum or Contract Time, Contractor shall notify SMART in writing within seven (7) Days after receiving the response. If SMART disagrees with Contractor, then Contractor shall proceed with the work identified and may give notice of intent to submit a Claim as described in Article 12 of Document 00 70 00 (General Conditions) and submit its Claim within thirty (30) Days of SMART's response. If SMART agrees with Contractor, then Contractor must submit a Cost Proposal within twenty-one (21) Days of date of SMART's response as described in article 1.3.A above. Contractor's failure to deliver either the foregoing notice and Claim or Cost Proposal by the respective deadlines stated in the foregoing sentences shall result in waiver of the right to file a Cost Proposal or Claim.

F. Supplemental Instruction: SMART may issue Supplemental Instruction to Contractor.

1. If Contractor is satisfied with Supplemental Instruction and does not request change in Contract Sum or Contract Time, then the Supplemental Instruction shall be executed without a Change Order.

2. If Contractor believes that the response results in change in Contract Sum or Contract Time, Contractor shall follow the procedure described in paragraph 1.3.B.4.

G. Construction Change Directives: If at any time SMART believes in good faith that a timely Change Order will not be agreed upon using the foregoing procedures, SMART may issue a CCD with its recommended cost and/or time adjustment. Upon receipt of CCD, Contractor shall promptly proceed with the change of Work involved and concurrently respond to SMART's CCD within seven (7) Days.

H. Contractor's response must be any one of the following:

1. Provide written response to SMART, accepting SMART's response, time, and cost.

2. Submit a (revised if applicable) Cost Proposal with supporting documentation (if applicable, reference original Cost Proposal number followed by the number .1, .2, .3, etc. for each revision), if SMART so requests.

3. Give notice of intent to submit a Claim as described in Article 12 of Document 00700 (General Conditions).

I. If the CCD provides for an adjustment to the Contract Sum, the adjustment shall be based on one of the following methods:

1. Mutual acceptance of a lump sum properly itemized and supported by sufficient substantiating data to permit evaluation.

2. Unit prices stated in the Contract Documents or subsequently agreed upon.

J. Force Account.

1. Cost to be determined in a manner agreed.

K. Lump Sum.

L. Contractor's written agreement to a CCD shall be recorded in a Change Order.

M. If Contractor does not respond promptly or disagrees with the method for adjustment in the Contract Sum, the method and the adjustment shall be determined by SMART on the basis of reasonable expenditures and savings of those performing the Work attributable to the change including, in case of an increase in the Contract Sum, a reasonable allowance for overhead and profit. If the parties still do not agree on the price for a CCD, Contractor may file a Claim per Article 12 of Document 00700 (General Conditions). Contractor shall keep and present, in such form as SMART may prescribe, an itemized accounting together with appropriate supporting data. Unless otherwise provided in the Contract Documents, costs for the purposes of this paragraph shall be limited to those provided in paragraphs 1.4 and 1.5 of this Section 01250.

N. Pending final determination of cost to SMART, amounts not in dispute may be included in Applications for Payment after a Change Order is executed for the amount not in dispute.

O. SMART requested RFP: Contractor shall furnish a Cost Proposal within seven (7) Days of SMART's RFP. Upon approval of RFP, SMART will issue a Change Order directing Contractor to proceed with extra Work. If the parties do not agree on the price for an RFP, SMART may either issue a CCD or decide the issue per Article 12 of Document 00 70 00 (General Conditions). Contractor shall perform the changed Work notwithstanding any claims or disagreements of any nature.

1. All Changes:

a. Documentation of Change in Contract Sum and Contract Time:

(i) Contractor shall maintain detailed records of Work performed on a time-and-material basis.

(ii) Contractor shall document each proposal for a change in cost or time with sufficient data to allow evaluation of the proposal.

(iii) Contractor shall, on request, provide additional data to support computations for:

(a) Quantities of products, materials, labor, and equipment

(b) Taxes, insurance, and bonds

(c) Overhead and profit

(d) Justification for any change in Contract Time and new Progress Schedule showing revision due if any

(e) Credit for deletions from Contract, similarly documented

(iv) Contractor shall support each claim for additional costs, and for Work performed on a Force-Account basis, with additional information including:

(a) Credit for deletions from Contract, similarly documented

(b) Origin and date of claim

(c) Dates and times Work was performed and by whom

(d) Time records and wage rates paid

(e) Invoices and receipts for products, materials, equipment, and subcontracts, similarly documented

(v) Correlation of Other Items:

(a) Contractor shall revise Application for Payment forms to record each authorized Change Order as a separate line item and adjust the Contract Sum as shown thereon prior to the next monthly pay period.

2. Responses: For all responses for which the Contract Documents, including without limitation this Section 01250, do not provide a specific time period, recipients shall respond within a reasonable time.

1.4 COST DETERMINATION

A. Total cost of extra Work or of Work omitted shall be the sum of labor costs, material costs, equipment rental costs, and specialist costs as defined herein plus overhead, and profit as allowed herein. This limit applies in all cases of claims for extra Work, whether calculating Cost Proposals, Change Orders or CCDs, or calculating claims of all types, and applies even in the event of fault, negligence, strict liability, or tort claims of all kinds, including strict liability or negligence. Contractor may recover no other costs arising out of or connected with the performance of extra Work, of any nature. No special, incidental, or consequential damages may be claimed or recovered against SMART, its representatives, or agents, whether arising from breach of Contract, negligence, or strict liability, unless specifically authorized in the Contract Documents.

B. Overhead and Profit: (Overhead shall be as defined in paragraph 1.7 of this Section 01 25 00)

1. Overhead and profit on labor for extra Work shall not exceed fifteen percent (10%).

2. Overhead and profit on materials for extra Work shall not exceed fifteen percent (5%).

3. Overhead and profit on equipment rental for extra Work shall not exceed fifteen percent (10%).

4. When extra Work is performed by a first tier Subcontractor, Contractor shall receive a five percent (5%) markup on Subcontractors' total costs of extra Work. First tier Subcontractor's markup on its Work shall not exceed fifteen percent (10%).

5. When extra Work is performed by a lower tier Subcontractor, Contractor shall receive a total of five percent (5%) markup on all Subcontractors' total costs of extra Work. First tier

Subcontractors and lower tier Subcontractors shall combine markup not to exceed nineteen percent (19%) and shall be divided as mutually agreed.

6. Notwithstanding the foregoing, in no case shall the total markup on any extra Work exceed twenty five percent (25%) of the direct cost, notwithstanding the actual number of Contract tiers.

7. On proposals covering both increases and decreases in Contract Sum, overhead and profit shall be allowed on the net increase only as determined in this paragraph 1.4. When the net difference is a deduction, no percentage for overhead profit and commission shall be allowed, but rather a deduction shall apply.

8. The markup shall include profit, small tools, cleanup, engineering, supervision, warranties, cost of preparing the cost proposal, jobsite overhead, home office overhead, and other items as defined in paragraph 1.8 of this section 01 25 00. No markup will be allowed on taxes, insurance, and bonds.

C. Taxes:

1. All State sales tax, use tax, County Tax, and applicable City sales taxes shall be included.

2. Federal and Excise tax shall not be included.

D. Owner-Operated Equipment: When owner-operated equipment is used to perform extra Work, Contractor will be paid for operator as follows:

1. Payment for equipment will be made in accordance with paragraph 0 of this Section 01 25 00.

2. Payment for cost of labor will be made at no more than rates of such labor established by Department of Industrial Relations Prevailing Wage Determination for type of worker and location of Work, whether or not owner-operator is actually covered by such an agreement.

E. Accord and Satisfaction: Every Change Order shall constitute a full accord and satisfaction, and release, of all Contractor (and if applicable, Subcontractor) claims for additional time, money or other relief arising from or relating to the subject matter of the change including, without limitation, impacts of all types, cumulative impacts, inefficiency, overtime, delay, and any other type of claim. Contractor may elect to reserve its rights to disputed claims arising from or relating to the changed Work at the time it signs a Change Order, but must do so expressly in writing delivered concurrently with the executed Change Order, and must also submit a Claim for the reserved disputed items pursuant to Article 12 of Document 00700 (General Conditions) no later than thirty (30) Days of Contractor's first written notice of its intent to reserve rights.

1.5 COST BREAKDOWN

A. Labor: Contractor will be paid cost of labor for workers (including forepersons when authorized by SMART) used in actual and direct performance of extra Work. Labor rate, whether employer is Contractor, Subcontractor, or other forces, will be sum of following:

1. Actual Wages: Actual wages paid shall include any employer payments to or on behalf of workers for health and welfare, pension, vacation, and similar purposes.

2. Labor surcharge: Payments imposed by local, county, state, and federal laws and ordinances, and other payments made to, or on behalf of, workers, other than actual wages as defined in paragraph 1.5.A.1 of this Section 01250, such as taxes and insurance. Labor surcharge shall be and shall not exceed that set forth in California Department of Transportation official labor surcharges schedule which is in effect on date upon which extra Work is accomplished and which schedule is incorporated herein by reference as though fully set forth herein.

3. Material: Only materials furnished by Contractor and necessarily used in performance of extra Work will be paid for. Cost of such materials will be cost, including sales/use taxes, to purchaser (Contractor, Subcontractor, or other forces) from supplier thereof, except as the following are applicable:

    a. If a cash or trade discount by the actual supplier is offered or available to the purchaser, it shall be credited to SMART notwithstanding the fact that such a discount may not have been taken.

    b. For materials salvaged upon completion of extra Work, salvage value of materials shall be deducted from cost, less discounts, of materials.

    c. If cost of a material is, in opinion of SMART, excessive, then cost of material shall be deemed to be lowest current wholesale price at which material is available in quantities concerned delivered to Site, less any discounts as provided in paragraph 1.5.B.1 of this Section 01250.

4. Equipment Rental: For Contractor- or Subcontractor-owned equipment, payment will be made at rental rates listed for equipment in California Department of Transportation official equipment rental rate schedule which is in effect on date upon which extra Work is accomplished and which schedule is incorporated herein by reference as though fully set forth herein. If there is no applicable rate for an item of equipment, then payment shall be made for Contractor- or Subcontractor-owned equipment at rental rate listed in the most recent edition of the Association of Equipment Distributors (AED) book. For rented equipment, payment will be made based on actual rental invoices. Equipment used on extra Work shall be of proper size and type. If, however, equipment of unwarranted size or type and cost is used, cost of use of equipment shall be calculated at rental rate for equipment of proper size and type, as determined by SMART. Rental rates paid shall be deemed to cover cost of fuel, oil, lubrication, supplies, small tools, necessary attachments, repairs and maintenance of any kind, depreciation, storage, insurance, and all incidentals. Unless otherwise specified, manufacturer's ratings, and manufacturer-approved modifications, shall be used to classify equipment for determination of applicable rental rates. Individual pieces of equipment or tools not listed in said publication and having a replacement value of $100 or less, whether or not consumed by use, shall be considered to be small tools and no payment will be made therefor as payment is included in payment for labor. Rental time will not be allowed while equipment is inoperative due to breakdowns.

a. For equipment on Site, rental time to be paid for equipment shall be time equipment is in operation on extra Work being performed or on standby as approved by SMART. The following shall be used in computing rental time of equipment:

   (i) When hourly rates are listed, less than 30 minutes of operation shall be considered to be half (½) hour of operation.

   (ii) When daily rates are listed, less than four hours of operation shall be considered to be half (1/2) Day of operation.

b. For equipment that must be brought to Site to be used exclusively on extra Work, cost of transporting equipment to Site and its return to its original location shall be determined as follows:

   (i) SMART will pay for the costs of loading and unloading equipment.

   (ii) The cost of transporting equipment in low bed trailers shall not exceed hourly rates charged by established haulers.

   (iii) The cost of transporting equipment shall not exceed applicable minimum established rates of California Public Utilities Commission.

   (iv) SMART will not make any payment for transporting and loading and unloading equipment if equipment is used on Work in any other way than upon extra Work.

c. Rental period may begin at time equipment is unloaded at Site of extra Work and terminate at end of the performance of the extra Work or Day on which SMART directs Contractor to discontinue use of equipment, whichever first occurs. Excluding Saturdays, Sundays, and except for SMART's legal holidays, unless equipment is used to perform extra Work on such Days, rental time to be paid per Day shall be four (4) hours for zero (0) to four (4) hours of operation, six (6) hours for four (4) to six (6) hours of operation and eight (8) hours for six (6) to eight (8) hours of operation. The number of hours to be paid for equipment that is operated less than eight hours due to breakdowns, shall not exceed eight less the number of hours equipment is inoperative due to breakdowns.

1.6 FORCE-ACCOUNT WORK

A. If it is impracticable because of nature of Work, or for any other reason, to fix an increase or decrease in price definitely in advance, Contractor may be directed to proceed at a not-to-exceed (NTE) maximum price which shall not under any circumstances be exceeded. Subject to such limitation, such extra Work shall be paid for at actual necessary cost for Force-Account Work or at the negotiated cost, as determined by SMART. The cost for Force-Account Work shall be determined pursuant to paragraphs 1.4 and 1.5 of this Section 01250.

B. Force-Account Work shall be used when it is not possible or practical to price out the changed Work prior to the start of that Work. In these cases, Force-Account Work will be utilized during the pricing and negotiation phase of the change. Once negotiations have been concluded and a bilateral agreement has been reached, the tracking of the Work under Force-Account is no longer

necessary. Force-Account Work shall also be used when a bilateral agreement on the value of the changed Work cannot be reached. SMART may approve other uses of Force-Account Work.

C. Whenever any Force-Account Work is in progress, Contractor shall report to SMART each Business Day in writing in detail amount and cost of labor and material used, and any other expense incurred in Force-Account Work on preceding Day. No claim for compensation for Force-Account Work will be allowed unless report shall have been made. Force-Account (cost reimbursement) charges shall be recorded daily and summarized in a form acceptable to SMART. Contractor or authorized representative shall complete, and sign form each Day. Contractor shall also provide with the form: the names and classifications of workers and hours worked by each; an itemization of all materials used; a list by size, type, and identification number of equipment and hours operated; and an indication of all Work performed by specialists.

D. Whenever Force-Account Work is in progress, Contractor shall report to SMART when seventy-five percent (75%) of the NTE amount has been expended.

E. Force-Account Work shall be paid as extra Work under this Section 01 25 00. Methods of determining payment for Work and materials provided in this paragraph 1.6 shall not apply to performance of Work or furnishings of material that, in judgment of SMART, may properly be classified under items for which prices are otherwise established in Contract Documents.

1.7 OVERHEAD DEFINED

A. The following constitutes charges that are deemed included in overhead for all Contract Modifications, including Force-Account Work or CCD Work, whether incurred by Contractor, Subcontractors, or suppliers, and Contractor shall not invoice or receive payment for these costs separately:

1. Drawings: Field drawings, shop drawings, etc., including submissions of drawings

2. Routine field inspection of Work proposed

3. General administration and preparation of cost proposals, schedule analysis, Change Orders, and other supporting documentation as necessary

4. Salaries of project engineer, superintendent, timekeeper, storekeeper, and secretaries

5. Plumbing

6. Electrical: Power, lighting

7. Surveying

8. Estimating

9. Protection of Work

10. Handling and disposal fees

11. Final cleanup

B. No payment for Force-Account Work shall be made until Contractor submits a Cost Proposal with original invoices substantiating materials and labor charges and all daily reports.

C. SMART shall have the right to audit all records in possession of Contractor relating to activities covered by Contractor's claims for Modification of Contract, including Force-Account Work and CCD Work.

D. Further, SMART will have right to audit, inspect, or copy all records maintained in connection with this Contract, including financial records, in possession of Contractor relating to any transaction or activity occurring or arising out of, or by virtue of, the Contract. If Contractor is a joint venture, right of SMART shall apply collaterally to same extent to records of joint venture sponsor, and of each individual joint venture member. This right shall be specifically enforceable, and any failure of Contractor to voluntarily comply shall be deemed an irrevocable waiver and release of all claims then pending that were or could have been subject to the Article 12 of Document 00 70 00 (General Conditions).

END OF SECTION 01 25 00

SECTION 01 31 19 PROJECT MEETINGS

PART 1— GENERAL

1.1 SECTION INCLUDES

A. This section includes a description of the minimum required project meetings, including:

1. Project Kick-Off Meeting
2. Scheduling Meetings
3. Progress Meetings
4. Design Review Meetings
5. Construction Preparatory Meetings
6. Safety Meetings
7. Special Meetings

1.2 MEASUREMENT AND PAYMENT

A. Separate measurement or payment will not be made for work required under this Section. All costs in connection therewith will be considered incidental to the item of work to which they pertain.

1.3 PROJECT KICK-OFF MEETING

A. A Project Kickoff meeting will be scheduled by the District's Engineer not more than seven working days after the effective date of the Notice to Proceed. The purpose of this meeting is to introduce the District's Engineer's representatives to their counterparts in the Contractor's organization and to establish lines of communication among these representatives. The Contractor's Project Manager, superintendent, quality representative, safety representative, EEO officer, Subcontractor representatives, and community relations representatives shall attend. Not less than four working days before the meeting, the District's Engineer will distribute a notice of this meeting, along with an agenda of the subjects to be addressed.

B. The District's Engineer will discuss the following requirements at this meeting:

1. Responsibilities and authorities of the District and the District's Engineer.
2. Equal Employment Opportunity (EEO) and Community Relations functions.

3. Quality control, inspection, and coordination of the Work.

4. Traffic requirements and permit requirements as applicable to the Work.

5. Procedures for submitting and processing Change Notices, Change Orders, Shop Drawings, product data, and samples.

6. Monthly progress payment cut-off dates.

7. Partial and final payments.

C. The Contractor shall perform the following at this meeting:

1. Introduce the Contractor's representatives, and briefly describe each person's responsibilities.

2. Distribute and discuss the list of major Subcontractors, their areas of responsibility, sequence of critical work, and tentative schedule of construction.

3. Discuss use of office, storage areas, staging areas, construction areas, and temporary easements.

4. Discuss construction safety.

5. Define housekeeping procedures.

6. Discuss construction methods.

7. Present quality control/quality assurance plan.

8. Present Baseline Schedule.

    1. Present proposed Schedule of Values.

9. Describe construction sequencing of the entire Contract, general jobsite layout, erosion and sedimentation control plans, haul routes, noise abatement, dust abatement, air and water pollution control, temporary street closings, and street restoration, as applicable.

10. Discuss coordination and notifications required for utility work and services.

11. Discuss deliveries and priorities of major equipment.

1.4 SCHEDULING MEETINGS

A. Meet with the District's Engineer to present the Contract Baseline Schedule upon submittal.

B. On a monthly basis, meet with the Engineer to review the Monthly Update Report, including Monthly Update Schedule and Payment Request.

B. Meet with the District's Engineer to review all other schedule submittals as required.

1.5 PROGRESS MEETINGS

A. The District's Engineer will schedule construction progress meetings each week and more often as necessary for the competent and timely execution of the Contract. The District's Engineer may schedule separate construction progress meetings for coordination with third parties. Contractor's personnel indicated in Article 1.03 shall attend these meetings. Progress meetings shall include representatives of Subcontractors who are or will be performing work during the next week and include an updated 3-week schedule

B. The District's Engineer will distribute notices of these meetings before such meeting to Contractor.

C. The Contractor's Project Manager shall attend the meetings. In addition to Contractor's Project Manager, Contractor shall be represented at each meeting by staff with detailed knowledge of the ongoing work such that Contractor can provide accurate updates of the status of all items of work and schedule for the upcoming weeks.

D. The agenda for progress meetings will be prepared by the District's Engineer with input from Contractor and will include the following:

1. Introduction of new attendees and areas of responsibility.

2. Review of minutes of previous meetings, amendment of minutes if necessary, and acceptance of minutes.

3. Analysis of work accomplished since the previous meeting, offsite fabrication problems, product delivery problems, submitted schedule slippages, problems arising from proposed changes, and other circumstances which might affect the progress of the Work. Contractor shall have an updated schedule showing all activities started, completed, and ongoing during previous week and such activities scheduled for the next week.

4. Discussion of sequence of work on the critical path, and schedule of construction using the progress schedule. Each activity shall have a current status and forecast completion. Contractor shall report on all activities which are forecast to be completed beyond the approved schedule date(s) and shall identify means of maintaining the approved schedule. Contractor shall present a Four Week Look Ahead Schedule that provides a detailed plan of all of the work scheduled in the current week and three consecutive following weeks

5. Discussion of work quality observations, problems, and employee work standards.

6. Discussion of coordination of utility work and other work by outside parties.

7. Discussion of changed conditions, time extensions, and other relevant subjects as they affect the progress of the Work.

8. Discussion of corrective measures to maintain construction progress schedule when necessary.

9. Discussion of potential claims and pending disputed issues.

10. Inquiries, requests for information, and Change Notices/Change Orders.

11. Discussion of upcoming month's work.

1.6 DESIGN REVIEW MEETINGS

A. Conduct Design Review Meetings to comply with the requirements of PR 2, Project Management.

1.7 CONSTRUCTION PREPARATORY MEETINGS

A. Conduct Construction Preparatory Meetings prior to commencing construction of each major element of the work. These Construction Preparatory Meetings shall be conducted as required by the Preparatory Phase Meeting Requirements in Section 01 45 00, Quality Control.

1.8 SAFETY MEETINGS

A. Conduct monthly Contractor Safety Meetings.

B. Conduct weekly tool-box safety talks.

C. Conduct Job Hazard Analysis Meetings as required with Contractor staff to review Contractor's analysis of job hazards for specific components of the Work and Contractor's specific safety plan.

D. Conduct other meetings as required to comply with the requirements of Section 01 35 24, Construction Safety.

1.9 SPECIAL MEETINGS

A. Special meetings may be called by any party by notifying all desired participants and the District's Engineer four (4) working days in advance, giving reason for meeting. Special meetings may be held without advance notice in urgent situations.

B. At any time during the progress of the Work, the District shall have authority to require Contractor to attend a meeting with any or all contractors engaged in the Work or in other work and notice of such meeting shall be duly observed and complied with by Contractor.

END OF SECTION 01 31 19

SECTION 01 32 16 PROGRESS SCHEDULES AND REPORTS

PART 1 – GENERAL

1.1 SECTION INCLUDES

A. Additional qualifications for Contractor's Scheduler and requirements for adequate planning, scheduling, managing, and executing the work, including:

1. Requirement for Contract Baseline Schedule.
2. Requirement for Monthly Update Reports, including, Monthly Update Schedules, and Resource, Cost and Payment Requests.
    1. Requirement for Four Week Plan.
    2. Requirement for As-Built Schedule.
    3. Requirement for Recovery Schedules.
3. Requirement for Time Impact Analyses
4. Three week look-ahead schedule.
5. Process for obtaining contract time adjustments.
6. Suspension of payments for failure to submit a Project Schedule.

1.2 SUBMITTALS

B. Preliminary 90-Day Schedule: Submit a Preliminary 90-Day Schedule covering the first 90 Days following the Notice-to-Proceed. Include schedule file naming conventions, activity ID numbering, baseline schedule coding system, bid items codes, scheme for creating Schedule Activity ID, Standard Activity Code Dictionary, and other required schedule information.

C. Project Baseline Schedule: Within 7 calendar days of NTP submit a Project Baseline Schedule to provide an overall schedule for the entire project from NTP to project closeout, and a narrative describing Contractor's approach for meeting the Contract Milestone dates. Submit Project Baseline Schedule Revisions as specified herein.

D. Monthly Status Schedule and Reports: Submit Monthly Status Schedule and Reports.

E. Recovery Schedule: Submit, if the Project Schedule Update indicates a completion date for any milestone beyond the Contract Milestone dates, the proposed revisions to recover the lost time.

A. Time Impact Analysis: If directed to proceed with changed when work or a Change Notice, submit a Time Impact Analysis (TIA) depicting how the changed work affects the other schedule activities and project critical path.

F. As-Built Schedule and Documentation: Submit a final As-Built CPM Network Diagram, computer generated reports, and direct labor hour curves.

B. Three Week Look-Ahead Schedule: Contractor shall maintain, and provide to SMART on a weekly basis, a three week look ahead schedule for the project work and include the previous week's work items completed.

C. Schedule Revisions: Submit Schedule Revisions as specified herein.

D. Contract Time Extension Requests: Submit Contract Time Extension Requests as specified herein.

1.3 DEFINITIONS

A. Activities are defined as discrete items of Work that must be accomplished under the Contract, and when complete, produce definable, recognizable entities or stages within the Project.

B. Activity durations are defined as the total number of actual working Days required to perform that activity.

C. Contract Float is defined as the time between the scheduled completion of the work and the Contract Milestones.

D. Payment Request is the invoice submitted by Contractor to request payment from the District.

E. The Project Schedule is defined to include Contract Baseline Schedule and subsequent revisions to the Project Schedule all as described in this Section. The Project Schedule is Contractor's Progress Schedule as described in GC 11, Prosecution and Progress of the Work.

G. CPM refers to the Critical Path Method of construction scheduling wherein any delay to an activity on the critical path will result in a delay to a Contract Milestone.

H. Near-critical paths are defined as those paths having 10 days or less of float at the time the Contract Baseline Schedule is submitted.

I. Payment Request is the invoice submitted by the Contractor to request payment from the District.

1.4 QUALIFICATIONS

J. Contractor shall employ experienced scheduling personnel qualified to use the latest version of Oracle Primavera P6® Project Manager. Experience level required is set forth below. Contractor may employ such personnel directly or may employ a consultant for this purpose. Provide qualifications of the Project Scheduler as specified below.

1. Identify the individual who will perform CPM scheduling.
2. Verify the individual's capability and a minimum five years' experience by describing similar rail construction projects on which the individual has successfully applied computerized CPM scheduling techniques.

    a. Include at least two projects of similar nature, scope and value not less than three fourths the Total Bid Price of this Project.

    b. Provide contact persons for referenced projects with current telephone, address and email address information.

K. The District reserves the right to reject Contractor's scheduler, or consultant, at any time. The District also reserves the right to refuse replacement of the Contractor's scheduler or consultant, if it believes such replacement will negatively affect the Contract.

PART 2 – PRODUCTS

2.1 SCHEDULING SOFTWARE

A. The Contractor shall provide one copy of Oracle Primavera P6® Project Management, Version 8.3(or later) to the District along with the Standard Package annual maintenance support by Oracle Primavera for the duration of the Contract.

PART 3 – EXECUTION

3.1 GENERAL

A. Contractor shall take responsibility for planning, scheduling, managing, and executing the Work in accordance with the Contract.

1. Use the last accepted and updated Project Schedule for planning, scheduling, managing, and executing the Work to be accomplished.

B. Contractor shall provide the Project Schedules described herein to enable the District to evaluate Work progress, determine payment, evaluate the cost of schedule recovery, and make Contract time adjustments.

1. The Project Schedule is the basis for measuring Contractor progress. All progress payments will be derived from and tied to the cost-loaded schedule activities.

1. Lack of an accepted schedule will result in the inability of the District to evaluate Contractor's progress for the purpose of payment.

2. Failure of Contractor to provide all information, as required by the Contract, shall result in the rejection of the entire Project Schedule submittal and the inability of the District to evaluate Contractor's progress for payment purposes.

C. Float Ownership: Neither the District nor Contractor owns float. The Project owns the float. As such, liability for delay of Contract Milestone dates rests with the party whose actions, last in time, actually cause delay to the Contract Milestone dates.

B. The Contractor shall develop all schedules using the Precedence Diagram Method (PDM) using Oracle Primavera P6® Project Management software and Microsoft Windows XP, Microsoft Windows Vista or Microsoft Windows 7 compatible hardware.

C. The Contractor shall formally transmit all project schedules in P6® format to the District on a compact disk (CD). The files on the CD shall be made using the P6® Import/Export utilities. The CD shall be permanently labeled with the type of schedule (90-Day, Contract Baseline, Monthly Update, Recovery, or TIA), full contract number, project name, schedule version (i.e. re-submittals), data date, and Primavera File Name(s). The schedule shall have all restrictions removed.

D. Each schedule file submitted shall have a name related to either the schedule data date, project name, or contract number. The Contractor shall develop a naming convention that will ensure that the names of the files submitted are unique. The Contractor shall submit the file naming convention to the District for acceptance.

The naming convention shall be submitted with the Preliminary 90-Day Schedule.

D. Upon award of the Contract, Contractor shall immediately commence with the development Contract Baseline Schedule to ensure compliance with the schedule submittal requirements.

E. Notwithstanding the acceptance of the Project Schedule submittal, failure to include any element of Work required for performance of this Contract or to complete any activity within the time indicated in the Project Schedule will not excuse Contractor from timely completion of Work required to achieve the Contract Milestones. If Contractor has failed to incorporate any element

of Work, Contractor shall incorporate that element of work into the Project Schedule with no impact to the Contract Milestones.

3.2 REQUIRED LEVEL OF DETAIL

E. General: The Project Schedules shall include an appropriate level of detail, with the minimum requirements specified herein. Failure to develop or update the Project Schedule or provide data to the District at the appropriate level of detail, as specified by the District, shall result in the rejection of the schedule. The District will use, but is not limited to, the following conditions to determine the appropriate level of detail to be used in the Project Schedules:

F. No activity in the schedule shall have duration greater than 15 working days, with the exception of submittal, review, fabrication and procurement activities, unless otherwise accepted by the District. Activity durations shall be the total number of actual working days required to perform that activity. The Contractor shallfurther break down any activities as requested by the District. Activity durations shall be the total number of actual working days required to perform that activity.

G. Activity Identification (ID) and Description:

1. Activity ID Numbering - The Contractor shall submit a scheme for creating Schedule Activity IDs. Activity ID Numbers shall not be modified or deleted without prior written acceptance by the District. Schedule Activity IDs and the corresponding Schedule of Values shall have the same identification numbers. Schedule activities may be a further breakdown of the Schedule of Values items, but must follow the same base numbering format. The activity ID numbering scheme shall be submitted with the Preliminary 90- Day Schedule.

2. Activity Description - Each activity shall have a narrative description consisting of a verb or work function (e.g., form, pour, excavate), an object (e.g.; slab, footing, rail), and location (e.g.; Central Ave., northeast quadrant). Activity descriptions for each unique Activity ID shall not be changed during the contract without the prior written approval of the District.

H. Schedule Software Settings and Restrictions:

1. Activity Constraints:

a. Date constraints, other than those required by the Contract, will not be allowed unless accepted by the District.

b. Contractor shall identify any constraints proposed and provide an explanation for the purpose of the constraint in the Narrative Report.

2. Lags:

a. Lags will not be used when the creation of an activity will perform the same function (e.g., concrete cure time).

b. Lag durations contained in the project schedule shall not have a negative value.

c. Contractor shall identify any lag proposed and provide an explanation for the purpose of the lag in the Narrative Report.

3. Default Progress Data Disallowed:

a. Actual Start and Finish dates shall not be automatically updated by default mechanisms that may be included in the CPM scheduling software system.

b. Actual Start and Actual Finish dates in the CPM schedule shall match the dates provided from Contractor Quality Control Reports and other contract documentation. These reports will be the sole basis for updating the schedule.

c. Work activities shall be updated by actual work progression rather than being cash flow driven.

4. Software Settings:

a. The updating of percent of complete and remaining durations of activities in progress shall be independent functions; program features that calculate one of these parameters from the other shall be disabled.

b. Schedule calculations and Out-of-Sequence progress (if applicable) shall be handled through Retained Logic, not Progress Override.

c. All activity durations and float values will be shown in days; time will not be shown in the duration display.

d. Date format will be DD-MMM-YY (i.e., 11-Dec-02).

e. Default activity type will be set to "Task Dependent" and “Fixed

Duration & Units.

I. Permitting Activities: Permitting activities, including necessary conferences and follow-up actions shall be integrated into the schedule.

J. Submittals: All Contractor submittals shall be incorporated into the schedule

and show a relationship with the appropriate review/ procurement/ construction/ installation activities.

K. The District and Other agency activities: District and other agency activities that could impact progress shall be shown in the schedule. District activities shall also include activities for predecessor contract restraints if applicable.

L. Project Work Calendars: The schedule shall contain the appropriate work day calendars showing contractor non-work days including weekends and holidays.

1. Employ different work calendars for differing work week conditions.

2. Start all work calendars on Monday and end on Sunday.

3. List all of the Contractor's non-workdays and discuss the various calendars in the narrative report accompanying the submittal of the Project Baseline Schedule.

M. Standard Activity Code Dictionary: Submit a coding system for the Preliminary 90- Day Schedule and Baseline Schedule that shall be used throughout the project. List the values for each activity code category and translate those values into project specific designations. Once accepted, the coding system will be used for the duration of the project. This activity coding system shall include the following at a minimum:

1. Responsibility - All activities shall be identified in the project schedule by the party responsible to perform the work. Responsibility includes, but is not limited to, the subcontracting firm, contractor work force, or agency performing a given task. Activities shall not belong to more than one responsible party. The responsible party for each activity shall be identified by the Responsibility Code.

2. Project Phase – All activities shall be identified in the schedule by Project Phase and/or type of work. Project phases should include work types such as design engineering, material and equipment procurement, subcontract bid and award, construction, etc.

3. Work Areas - All activities shall be identified in the project schedule by the work area in which the activity occurs. Activities shall not be allowed to cover more than one work area. The work area of each activity shall be identified by the Work Area Code.

4. Bid Item - All activities shall be identified in the Project Schedule by the Bid Item to which the activity belongs. The bid item for each appropriate activity

shall be identified by the Bid Item Code.

3.2 COST AND RESOURCE LOADING

A. General: The Project Schedules shall be cost and resource loaded as follows:

1. Schedule of Values (Cost-Loaded Activities). The CPM schedule shall be cost loaded based on using the schedule of values accepted by the District. Schedule of Values shall be implemented in the Project Schedule as cost- loaded activities and shall adhere to the requirements of Specification Section 01 20 00 – Price and Payment Procedures.

    a. All schedule activities that have been cost loaded for payment request purposes shall be assigned a cost resource and resource quantity equal to the estimated dollar value of the work performed and correlating to either the appropriate bid item or appropriate subdivision thereof.

    b. This cost loading shall be used to generate periodic progress payments requests. The Payment Request Report is further discussed in Monthly Update Report and Payment Request herein.

    c. Percent complete for cost-loaded activities shall be derived from the quantity or value of work performed and accepted, divided by the total item value in accordance with the Schedule of Values.

2. Resource Loading Activities - All activities shall have an estimate of the average number of workers identified per day by craft and the critical equipment that are expected to be used during the execution of the activity. The Contractor may use manpower or equipment restraint logic relationship to optimize and level manpower and equipment requirements. However, when this leveling technique is used in establishing the Contract Baseline Schedule, it shall be reflected in the logic with restraints identified as "restraint - for manpower or equipment leveling purposes only." Critical or near-critical paths resulting from the use of manpower restraints shall be kept to a minimum.

    a. Labor Resource Loading - As part of the Project Schedule development, each work performance activity shall have an estimate of the number of workers per day by trade. Include in the resource dictionary a name description of the different trades to be employed during the project. If no workers are required for an activity, then the activity shall be identified as using zero workers per day.

    b. Equipment Resource Loading - As part of the Project Schedule development, each construction activity shall have an estimate

of the major pieces of equipment used per day. Include in the resource dictionary a description of the major items of construction

equipment planned that are planned to be used during the project. The description shall include the type and capacity of the equipment. If no equipment is required for an activity, then the activity shall be identified as using zero equipment per day.

3.3 PRELIMINARY 90-DAY SCHEDULE

A. Preliminary Schedule: Prepare a Preliminary 90-Day (3-Month) Schedule covering the first 90 Calendar Days following the Notice-to-Proceed (NTP) and submit it to the Resident Engineer at the Project Kick-off Meeting required by Section 01 31 19 – Project Meetings.

1. The Preliminary 90-Day Schedule shall incorporate the Preliminary Schedule of Values.

2. All reports required as part of the Contract Baseline Schedule shall be provided as part of the Preliminary 90-day schedule submittal.

3. The Preliminary 90-Day Schedule shall be time-scaled and shall show interdependency of activities.

4. Show the schedule logic and all critical activities on the Preliminary 90-Day Schedule.

   a. Show all activities that will or may affect completion dates including, but not limited to, design, planning, mobilization, sequence of early operations, submittals, procurement, fabrication, and construction.

   b. Identify activities and Milestones that will or may affect, or be affected by, the activities of the District, public utilities, and/or other third parties.

   c. Show Work beyond 90 calendar days in summary form. In the Preliminary 90-day schedule only, these summary activities may exceed the maximum activity duration of 15 working days. However, the Contractor shall provide a further detailed breakdown of these activities in the Contract Baseline Schedule or as requested by the District upon review.

5. Include a narrative describing the Contractor's approach to design, mobilization, procurement, and construction during the first 90 Calendar Days after the NTP.

a. Elaborate on the basis for durations, production rates, and equipment to be used.

b. Identify major assumptions used to develop the schedule.

B. Within 14 Calendar Days after receipt, the Resident Engineer will respond either with acceptance or direction to amend and resubmit.

1. All requirements in Monthly Update Report and Payment Request herein shall be based on the Preliminary 90-day schedule for the first 90 calendar days or until the Baseline Schedule is submitted and accepted. The progress payment request shall be derived from the Preliminary 90-day schedule for the first 90-calendar days or until the Baseline Schedule is submitted and accepted.

2. If, during the first 90 Calendar Days after NTP, the Contractor is of the opinion that any of the Work included on its Preliminary 90-Day Schedule has been impacted, causing an impact to the critical path, the Contractor shall submit to the District a written Time Impact Analysis (TIA) in accordance with the requirements herein. The TIA shall be based on the most current update of the Preliminary 90-Day Schedule that has been accepted by the District. The Contractor shall also provide to the District a recovery schedule or mitigation plan as applicable, as required herein.

3. Incorporate unchanged the Preliminary 90-Day Schedule logic, sequence and durations for activities into the Contract Baseline Schedule at the time the Contract Baseline Schedule is submitted.

4. Identify activities and milestones that will or may affect, or be affected by, the activities of the District, public utilities, and/or other third parties.

3.3 CONTRACT BASELINE SCHEDULE

A. Develop and submit a Contract Baseline Schedule which includes a CPM Network Diagram, computer generated reports, a computer-generated cash flow, direct labor and equipment usage curves, and a narrative describing the Contractor's approach for meeting the Contract Milestone dates, covering project work from NTP to project closeout.

B. The submittal and review of the Contract Baseline Schedule will follow the time frames established below.

1. Submit the Contract Baseline Schedule to the District no later than 7 Calendar Days after the date of Notice-To-Proceed (NTP). Use the day following the NTP date as day number one for scheduling.

2. Within 15 working days of the submittal the District will respond with an appraisal and evaluation containing either acceptance or direction to amend and resubmit.

3. Immediately upon receipt of comments from the District, confer with the District's designated representative on the appraisal and evaluation of the proposed Contract Baseline Schedule.

4. Make necessary changes resulting from this review and resubmit the Contract Baseline Schedule for acceptance within 7 Working Days of receipt of comments from the District.

5. If the schedule is not accepted on re-submittal, make all changes requested by the District. The District may accept the schedule on condition that the first monthly Project Schedule Update be revised to correct deficiencies identified.

6. The District reserves the right to require Contractor to adjust, add to, or clarify any portion of the schedule that may later be discovered to be insufficient for monitoring of Work or favorable review of progress payment requests. No additional compensation will be provided for such adjustments, additions, or clarifications.

C. Contract Baseline Schedule Detailed Requirements. The Contract Baseline Schedule shall meet the following requirements:

1. Create schedule activities to include Contract deliverables, such as but not limited to, the development, submittal and review of contract design reports, plans and studies, final design engineering, permit applications and variances, Samples of Materials, Shop Drawings, design drawings and software requirements specifications, Working Drawings, Inspection and Test Plans, Quality Assurance/Quality Control Activities, and Site Specific Work Site Safety Plan.

   a. Show processing/review duration times for submittals and shop drawings for all Contract-required material and equipment. Activities that are dependent on submittal approval or material delivery shall not be scheduled to start earlier than expected submittal approval or procured item delivery dates.

D. Allow for a submittal review time by the District of 15 calendar days as provided in the Contract.

1. Include time for submittals, possible re-submittals, and reviews by the District. Coordinate with accepted schedule for submission of shop drawings, samples, and other submittals.

2. Contractor shall be responsible for all impacts resulting from resubmittal of rejected shop drawings and submittals.

3. The District shall not be responsible for any impacts resulting from submittal and shop drawing review, if the review time frame, in accordance with the Contract, is not incorporated in the schedule.

4. Include separate Activities for the procurement of critical Materials and equipment, fabrication of special Materials and equipment and their installation and testing, and delivery of District -furnished items (if any per the Contract).

a. Show procurement of major equipment, through receipt and inspection at the jobsite, identified as separate activities.

5. Include time for fabrication and delivery of manufactured products for the Work.

1) Show dependencies between engineering, procurement and construction activities.

5. Include District activities that will or may impact other schedule activities, and those of affected utilities and other similarly involved third parties. Show the interface with the work of other contractors.

6. Include activities for maintaining Contract Record Documents as explained in Section 01 78 39 – Project Record Documents.

6. Allow at least 20 working days for developing punch list(s), completion of punch list items, and final clean-up for the Work or any designated portion thereof. No other activities shall be scheduled during this period.

7. Provide the Project Schedule with the capability to generate and update cash flow forecasts and progress payment requests.

8. Cost and Resource-load the schedule.

9. Employ appropriate work week calendars.

10. Include dependencies or relationships between activities.

11. Clearly identify the Critical Path activities, including critical paths to Contract Milestone dates. Provide a network diagram showing the critical path activities and their relationship to the Contract Milestones. No more than 25 percent of the activities shall be critical or near critical.

12. Show detailed subcontractor Work activities. In addition, furnish for each subcontractor and supplier, submitted on subcontractor or supplier letterhead a statement certifying that subcontractor or supplier concurs with Contractor's Project Schedule and that subcontractor's or supplier's related schedules have been properly incorporated.

C. Reports and Curves: The Contract Baseline Schedule submittal requires reports as described below:

1. Narrative: Submit a written narrative discussing basic assumptions; historic project comparisons; productivity and installation rates; construction staging plans; maintenance of traffic; quantities;

manpower and crew development; construction equipment planned; critical path activities and why they are critical; activities requiring overtime or additional shifts; weekends, holidays and special non-workdays; schedule calendars; potential problem areas; permits; coordination required with the District, railroads, utilities or any other parties; long lead delivery items; and other elements related to developing the schedule and determining activity durations. Describe the approach for meeting the required Contract Milestone dates.

2. Schedule Plots: The following time scaled network diagrams shall be provided showing activities and their logical relationships:

   a. Critical Path Bar Charts: The longest path bar charts shall show the critical path (longest path) to each of the contract milestones.

   b. Project Schedule by Phase, by Work Area: The bar chart shall show the complete project schedule, through the entire project timeline with all activities. The schedule shall be grouped by Phase, by Work Area, and then sorted by early start, then by early finish, then by total float. Critical paths shall be clearly highlighted.

   c. Three Month Look Ahead Schedule: The bar chart shall show the scheduled project activities for three months ahead of the data date and one month progress prior to the data date. The schedule shall be grouped by Phase, by Area, and then sorted by total float, then by early start, then by early finish:

      1) The schedule plots described above shall all contain the following fields for each activity: activity ID, activity description, original duration, remaining duration, % complete, early start, early finish, late start, late finish, and total float.

3. Schedule Reports: Provide the following schedule reports:

   a. Activity Report: Provide a schedule report sorted by activity ID.

   b. Predecessor/Successor Report: Contains activities as shown on the Project Schedule sorted in order of ascending activity number, and identifies detailed predecessor and successor activities.

   c. Reports shall contain the following information; Activity ID number, Activity description, estimated original duration, estimated

      remaining duration, computed or specified early start

date, computed early finish date, computed late start date, computed or specified late finish date, and total float.

E. Payment Request:

1. The Payment Request shall be a compilation of Contractor's basis for Payment Earnings on the project from the Notice to Proceed until the completion of the Contract.

2. This Payment Request shall reflect the budgeted Payment Earnings of specific activities based on the cost loading of the schedule.

3. This report shall serve as a Contractor Payment Request form. Contractor shall be provided with the payment request form and format required by the District. Once accepted by the District, it shall be updated, and submitted as the Monthly Payment Request Report. As a minimum, Contractor's invoice will be expected to provide the information specified below.

d. Activities shall be grouped by bid item and sorted by activity numbers. This report shall: sum all activities in a bid item and provide for a bid item percent complete; and sum all bid items to provide for a total project percent complete. The printed report shall contain, for each bid item:

1) Bid Item Number.

2) Pay Item Number (if established or applicable).

3) Activity ID Number.

4) Activity Description.

4. Original Contract Amounts: Unit of Measure, Quantity, Unit Price, Bid Amount. The bid amount shall be the bid price or appropriate subdivision of a bid item amount.

5) Earnings This Period: Quantity and Amount Earned this period (0 in the Baseline Schedule).

6) Earnings Last Period: Quantity and Amount Earned last period (0 in the Baseline Schedule).

7) Earnings To-Date: Quantity, Amount Earned and Percent Complete (based on cost) To Date (0 in the Baseline Schedule).

a. Accumulated retention and other deductions and withholdings, in accordance with the Contract, shall be shown as separate items in the Payment Request Report.

4. Cost Reports: Provide the following cost reports:

   a. Cash Flow Report: Report calculated by early start, late start and indicating actual progress. This report shall show the planned cash flow versus actual cash flow as of the report period, including a forecast of cash flow for the remaining Contract duration. Provide an exhibit depicting this information in a graphic form.

5. Resource Reports. Provide the following resource reports:

   a. Direct Labor workers/day and Equipment/day Report: Contains Activities as shown on the Project Schedule listed in order of ascending Activity number and identifies the total direct labor workers/days by craft and equipment/day by type for each activity.

   b. Project Direct Labor workers/day by craft curve: Display by month the cumulative direct labor usage planned for the duration of the Contract.

   c. Project Equipment/day by type usage curve: Display by month the cumulative direct equipment usage planned for the duration of the Contract.

6. Submit eight bound copies of the Contract Baseline Schedule. Use the same data date irrespective of the dates on which the individual documents of the Contract Baseline Schedule were prepared.

7. Provide 3 copies of a CD containing all relevant schedule, pay request, cost and resource files. The CD shall contain the following:

   a. A copy of the schedule files created using the P6® Import/Export utilities.

   b. A copy of all reports and plots submitted in PDF format.

8. The Project Schedule shall be updated monthly in the Monthly Update Report. The last accepted Project Schedule shall serve as the baseline from which changes in durations and logic will be determined. The Contractor shall specifically identify in the monthly report narrative and obtain prior acceptance of all proposed changes including added or deleted activities, duration changes and logic changes.

3.4 MONTHLY UPDATE REPORT AND PAYMENT REQUEST

A. The Monthly Update Report shall include the Monthly Update Schedule,

Payment Request Report, Cost and Resource Reports.

B. Prepare and submit the Monthly Update Report to update the Project Schedule and serve as the Contractor's Progress Payment Request.

1. Each Project Schedule update shall be complete, including updated information for all items required for the Contract Baseline Schedule.

2. Each Project Schedule update shall continue to show all work activities including those already completed. These completed activities shall accurately reflect "as-built" information by indicating when activities were actually started and completed and shall show corrected as-built logic.

3. If an activity is closed and work is later restarted, a supplemental activity without pay will be created to track the work.

4. Incorporate all District-accepted schedule revisions throughout the report.

5. Activity Actual Start dates and or Actual Finish Dates shown in the Schedule Updates and Reports shall not be shown to occur on or later than the data date.

6. Prepare the report using data generated as of the "data date" assigned by the District for the reporting period in question.

a. Use the same data date for all documents in a single Monthly Update Report irrespective of the dates of preparation of the individual documents.

b. The District will provide the list of "data dates" at the Pre-Construction Meeting.

C. Use the Monthly Update Schedule to generate the progress payment request using output from the Primavera scheduling software.

D. Monthly Update Report Contents. The Monthly Updated Report shall be an updated CPM Network Diagram of the last accepted Project Schedule. If the Monthly Update Report indicates an actual or potential delay to the Contract Milestone dates, identify the problem, cause, and the activities affected within the narrative, regardless of responsibility for the delay, and propose a method or methods to mitigate the delay for discussion with the District. If a delay is caused by the Contractor, a Recovery Schedule shall subsequently be prepared and submitted as specified herein. If a delay has been caused by the District a formal notice of delay shall be provided and a TIA prepared as specified herein. The Monthly Update Report shall include:

1. Narrative. A narrative identifying the work actually completed and

reflecting the progress along the critical path in terms of Days ahead of or behind the Contract Milestone dates. The narrative report shall discuss:

a. Schedule Status: Status of major Project components (percent complete, amount of time ahead or behind schedule) and an explanation of how the Project will be brought back on schedule if delays have occurred.

b. Critical Path Progress: Progress made on critical activities indicated on the Project Schedule. Provide a list of critical activities scheduled to be performed next month.

c. Procurement Status: Provide the status of major material and equipment procurement.

d. Delays During the Reporting Period: Describe any new delays encountered during the reporting period.

e. Schedule Revisions: Description of the District accepted schedule revisions incorporated in the schedule, including changes to logic or to activity durations.

f. Additional Information: Contractor may include any other information pertinent to the status of the Project and shall include additional status information requested by the District at no additional cost.

2. Schedule Plots. The following time scaled network diagrams shall be provided showing activities and their logical relationships:

a. Critical Path Bar Charts: The longest path bar charts shall show the critical path (longest path) to each of the contract milestones.

b. Critical Path Progress Chart: The bar chart shall show the progress along the critical path from the previous month's schedule.

c. Project Schedule by Phase, by Work Area The bar chart shall show the complete project schedule, through the entire project timeline with all activities. The schedule shall be grouped by Phase, by Area, and then sorted by early start, then by early finish, then by total float. Critical paths shall be clearly highlighted.

d. Three Month Look Ahead Schedule: The bar chart shall show

the scheduled project activities for three months ahead of the data date and one month progress prior to the data date. The schedule shall be grouped by Phase, by Area, and then sorted by total float, then by early start, then by early finish.

e. The schedule plots described above shall all contain the following fields for each activity: activity ID, activity description, original duration, remaining duration, % complete, early start, early finish, late start, late finish, and total float.

3. Schedule Reports: Provide the following schedule reports:

a. Activity Report: Provide a schedule report sorted by activity ID.

b. Predecessor/Successor Report: Contains activities as shown on the Project Schedule sorted in order of ascending activity number, and identifies detailed predecessor and successor activities.

c. Schedule Revision Report: Provide a schedule report showing and highlighting added, deleted or changed activities, along with any revised logic.

d. Reports shall contain the following information; Activity ID number, Activity description, estimated original duration, estimated remaining duration, computed or specified early start date, computed early finish date, computed late start date, computed or specified late finish date, and total float.

4. Payment Request: The updated Payment Request form, as accepted in the Baseline Schedule submittal, shall serve as the Monthly Payment Request. The report shall be a compilation of the Contractor's Total Payment Earnings on the project from the Notice to Proceed until the most recent Monthly Schedule Update Meeting. This report shall reflect the current month's Payment Earnings of specific activities based on the progress made in the field and accepted by the District at the most recent Monthly Schedule Update Meeting. Provided that the Contractor has provided a complete schedule update, this report shall serve as the Contractor Payment Request.

5. Cost Reports: Provide the following cost reports:

a. Cash Flow Report: Report calculated by early start, late start and indicating actual progress. This report shall show the planned cash flow versus actual cash flow as of the report period, including a forecast of cash flow for the remaining Contract duration. Provide an exhibit depicting this

information in a graphic form.

6. Resource Reports: Provide the following resource reports:

   a. Updated Direct Labor workers/day and Equipment/day Report: Contains Activities as shown on the Project Schedule listed in order of ascending Activity number, and identifies the total direct labor workers/days by craft and equipment/day by type for each activity.

   b. Project Direct Labor workers/day by craft curve: Provide an updated Direct Labor Hour Curve displaying the cumulative planned hours versus actual data as of the report period, including a forecast of direct labor hours for the remaining Contract duration. Provide an exhibit depicting this in graphic form.

   c. Project Equipment/day by type usage curve: Provide an Updated Project Equipment Hour Curve displaying the cumulative planned hours versus actual data as of the report period, including a forecast of equipment hours for the remaining Contract duration. Provide an exhibit depicting this information in graphic form.

7. Submit eight bound copies of the Monthly Update Report:

   a. Provide report tabs and dividers for each of the sections identified for the monthly update report, including: 1) Narrative, 2) Schedule Plots, 3) Schedule Reports, 4) Payment Request Report, 5) Cost Reports, and 6) Resource Reports.

   b. Use the same data date irrespective of the dates on which the individual documents of the Project Schedule were prepared.

8. Provide 3 copies of a CD containing all relevant schedule, pay request, cost and resource files. The CD shall contain the following:

   a. A copy of the schedule files created using the P6® Import/Export utilities.

   b. A copy of all reports and plots submitted in PDF format.

9. In addition to the above reports, the District may request, from month-to- month, any two reports as specified by the District, which may include, but are not limited to:

   a. Activities by early start.

b. Activities by late start.

c. Activities grouped by subcontractors and/or selected trades.

d. Activities with scheduled early start dates in a given time frame, such as 15 or 30 day outlook.

E. The District may direct that additional update reports be prepared in accordance with this Article, and may call for more frequent status meetings.

1. Preparation and submittal of additional update reports will not be required more frequently than weekly.

2. Prepare such additional reports and attend meetings at no additional cost to the District.

F. The Contractor shall submit a draft Monthly Update Report at the monthly Schedule Update meeting in accordance with Section 01 20 00 – Price and Payment Procedures and Section 01 31 19 – Project Meetings. The Contractor shall incorporate the District comments into the Monthly Update Report for submittal. Once accepted by the District, the Monthly Update Report shall serve as the Contractor's Payment Request.

G. Monthly Update Reports, and the information contained therein, shall not be construed as claims, notice of claims, notice of delay, or requests for changes or compensation. These shall be provided separately and pursuant to their respective contractual requirements.

H. Neither updating, changing or revising of any report, curve, schedule or narrative submitted to the District by the Contractor under this Contract, nor the District's review or acceptance of any such report, curve, schedule or narrative shall have the effect of amending or modifying, in any way, the Contract Milestones or of modifying or limiting, in any way, the Contractor's obligations under this Contract.

3.5 REVISIONS

A. Updating the Project Schedule to reflect actual progress shall not be considered revisions to the Project Schedule.

B. To justify revisions to the accepted Project Schedule, the Contractor shall provide the District with a written narrative and separate fragnet for review and acceptance prior to incorporation into the current Project Schedule update. The written narrative shall provide a full description and reasons for each Work activity or logic relationship revised. For revisions affecting the sequence of work, including the addition of activities into a sequence, the Contractor shall provide a separate schedule diagram (fragnet), with the following minimum components:

1. The fragnet shall be a CPM Network Diagram showing revised and affected activities.

2. The Contractor shall compare the original sequence to the revised sequence of work.

3. Each fragnet used to develop such revisions shall demonstrate the impact of the revision on the last accepted Project Schedule. The fragnet shall show the relationship of all schedule revisions to the critical path.

4. An Activity Report and Predecessor/Successor Report, as specified herein, for all revised and affected activities shall be provided.

C. The Contractor shall provide the written narrative and schedule diagram for revisions a minimum of 2 working days in advance of the Monthly Schedule Update Meeting.

D. Unexecuted Change Order work shall not be incorporated into the schedule. Only after a Change Order has been favorably reviewed and accepted can the changes to the schedule be made. Incorporation of a Change Order into the Project Schedule shall not impact the Critical Path unless the Time Impact Analysis, demonstrating the impact to the Critical Path, for the Change Order has been accepted. If a Time Impact Analysis for a Change Order has not been submitted prior to execution of the Change Order, the Change Order shall be incorporated into the schedule without impact to the Critical Path. Schedule revisions due to the Change Order shall be provided as specified herein

E. Schedule revisions shall not be incorporated into any Project Schedule update until the revisions have been reviewed and accepted by the District. The District may request further information and justification for schedule revisions and the Contractor shall, within 3 working days after the date of such request, provide the District with a complete written narrative response to the District's request. If requested, the narrative shall be accompanied with revised or further detailed fragnet schedules as requested by the District.

F. If the Contractor's revision is still not accepted by the District, and the Contractor disagrees with the District's position, the Contractor has 7 Calendar Days from receipt of the District's letter rejecting the revision, to provide a written narrative providing full justification and explanation for the revision. The Contractor's failure to respond in writing within the above 7 calendar days shall be contractually interpreted as acceptance of the District's position, and the Contractor waives its right to subsequent dispute or to file a claim regarding the District's position. Upon receipt of the Contractor's response, the District will issue a final review. The Contractor shall incorporate the schedule revisions into the Project Schedule as reviewed by the District.

G. Added activities shall not be cost loaded and the cost loading of changed activities shall not be revised until a Change Order has been executed without the prior acceptance of the District.

H. Upon acceptance of a fragment, add or revise cash flow, direct labor, and equipment cost data for all new and/or revised Activities to the current Project Schedule.

I. Provide a CD containing all data relating to proposed and accepted revisions to the Project Schedule with the revision. Data files contained on the CD shall be generated using the P6® Import/Export utilities.

3.6 RECOVERY SCHEDULE

A. If the Project Schedule Update shows a completion date for any milestone beyond the Contract Milestone dates, the Contractor shall, within 7 Calendar Days after submittal of the Project Schedule Update showing such delay, submit to the District the proposed revisions to recover the lost time.

1. As part of this submittal, the Contractor shall provide a written narrative explaining each action and schedule revision made to recapture the lost time.

2. If the revisions include sequence changes, the Contractor shall provide a fragnet schedule diagram comparing the original sequence to the revised sequence of work.

B. The revisions shall not be incorporated into a regular monthly schedule update until the revisions have been reviewed and accepted by the District.

C. If the Contractor's revisions are not accepted by the District, the District and the Contractor shall follow the procedures above.

D. The Contractor shall submit a Recovery Schedule as specified in this paragraph for all delays to Contract Milestone dates, including, but not limited to Contractor and the District caused delays. If the delay is a District caused delay, the Contractor shall also follow the requirements of the procedures below and submit a Time Impact Analysis, request for Time Extension if applicable, and a Mitigation Plan if a Time Extension is being requested. Provide a CD containing all data relating to proposed and approved revisions to the Project Schedule with the revision. Schedule Data files contained on the CD shall be generated using the P6® Import/Export utilities.

3.7 TIME IMPACT ANALYSIS FOR CHANGE ORDERS AND OTHER DELAYS

A. When the Contractor is directed to proceed with changed work, or issued a Change Notice, the Contractor shall prepare and submit, within 14 Calendar Days of notification, a Time Impact Analysis (TIA) that includes both a written

narrative and a schedule diagram (fragnet) depicting how the changed work affects the other schedule activities. The fragnet shall show how the Contractor proposes to incorporate the changed work in the schedule.

B. The TIA shall be based on the last accepted Project Schedule update.

C. If applicable, the Contractor shall demonstrate how the changed work impacts the current schedule update Critical Path. The fragnet must be tied to the main sequence of schedule activities to enable the District to evaluate the impact of changed work to the schedule Critical Path. The Contractor is also responsible for requesting time extensions based on the TIA's impact on the Critical Path.

D. If the changed work impacts the Critical Path and a Contract Milestone, of the last accepted Project Schedule, the Contractor shall submit, along with the TIA, a mitigation plan, including a schedule diagram (fragnet) which explains how (e.g., increase crew size, overtime, etc.) the impact can be mitigated, and Contract Milestone date recovered. The Contractor shall also include a detailed cost breakdown of the labor, equipment and material the Contractor would expend to mitigate the District caused time impact. The Contractor is responsible for the cost of preparing the mitigation plan.

E. The Contractor shall be required to comply with the requirements of A through D above for all types of delays.

F. The Contractor shall be responsible for all costs associated with the preparation of TIAs and the process of incorporating them into the last accepted Project Schedule Update. The Contractor shall provide the District with 4 copies of each TIA.

G. Provide a CD containing all data relating to proposed and accepted revisions to the Project Schedule with the revision. Schedule Data files contained on the CD shall be generated using the P6® Import/Export utilities.

3.4 CONTRACT TIME ADJUSTMENTS

A. Contractor is responsible for requesting time extensions for time impacts that, in the opinion of Contractor, impact the Critical Path of the current accepted Project Schedule update. Notice of time impacts shall be given in writing and pursuant to General Conditions (GC) 8.4.2 Extension of Time for Certain Delays and GC 9.4 Potential Claims and SC 9.4.

B. Where an event for which the District is responsible impacts the projected Contract Milestone dates, Contractor shall, within 14 Working Days from the date of such impact, submit a written mitigation plan as specified herein.

C. Failure to request time or provide the required mitigation plan will result in Contractor waiving its right to a time extension and cost to mitigate the delay.

D. No time will be granted under this Contract for cumulative effect of changes.

E. The District will not be obligated to consider any time extension request unless requirements of Contract Documents are complied with.

F. Failure of Contractor to perform in accordance with the current Project Schedule update shall not be excused by submittal of time extension requests.

G. Extensions of time for Contract performance as specified in the Contract may be granted only to the extent that time adjustments to the affected Work items exceed the total float time available at the time of the delay along the affected path(s) of the Project Schedule.

   1. Float is not for the exclusive use or benefit of either the District or Contractor.

   2. As long as it is acting in good faith, either party may use the available float up to the point that the float is fully absorbed without being charged for a delay to the Contract.

3.5 PROJECT SCHEDULE

A. During the construction/startup/commissioning phase of the Project, Contractor shall submit a Three Week Lookahead Schedule due at the Weekly Construction Progress Meetings.

B. The Schedule shall show the actual progress for the previous week and planned activities for the upcoming three weeks. It is a more detailed subset of the activities contained within the Contract Schedule. The activities included shall be based upon bid items. The Plan shall provide sufficient detail to address all activities being performed on a daily basis, generally be prepared by work Area, by work discipline/crew, identify issues requiring District action or input, and note any pending labor, material, or equipment constraints to performing the Work planned in the next three weeks.

3.8 AS-BUILT SCHEDULE AND DOCUMENTATION

A. Within 30 Calendar Days after Contract Work is complete and prior to notice of fulfillment of obligations, Final Completion, and final payment; submit a final As- Built CPM Network Diagram, computer generated reports, and direct labor usage curves for the District's acceptance.

B. Prepare the documents in accordance with the requirements for Contract record documents in the form specified in Section 01 78 39 – Project Record Documents, and requirements herein.

C. The As-built schedule shall be consistent with progress updates submitted pursuant to these specifications during the course of the contract.

3.6 SUSPENSION OF PAYMENTS

A. If Contractor fails at any time to timely submit an acceptable schedule, update, or revision; the District reserves the right, without waiver of other remedies available to it, to suspend progress

payments for completed Work until the due schedule, update, or revision is submitted to and accepted by the District.

END OF SECTION 01 32 16

SECTION 01 32 33 PHOTOGRAPHIC DOCUMENTATION

PART 1— GENERAL

1.1 SECTION INCLUDES

A. This section includes:

1. Stages of construction.
2. Quality and quantity of photographs.
3. Identification of photographs.
4. Video recordings.
5. Disputes, and potential claims.

1.2 MEASUREMENT AND PAYMENT

A. Separate measurement or payment will not be made for work required under this Section. All costs in connection with the work specified herein will be considered to be included with the related item of work in the Bid Schedule of the Bid Form, or incidental to the Work.

1.3 STAGES OF CONSTRUCTION

A. Contractor shall take photographs and video at all construction milestones and at each of the following stages of construction:

1. Within 15 working days of NTP
2. Before commencement of clearing and demolition
3. Upon completion of clearing and demolition
4. Monthly during performance of the Work; and
5. Upon completion of the Work.
    1. For any activities that last less than a month, documentation must be taken before during and upon completion.
6. Anytime an event arises that may result in a Change Order, Notice of Potential Claim, impact on other contracts or delay in project and the problem can be illustrated by photographs.

B. Furnish at least three different views or vantage points of each milestone and stage of construction. Furnish an average of 20 photographs each month until completion of the Work.

1.4 QUALITY AND QUANTITY OF PHOTOGRAPHS

A. All photographs shall be digital. Quality must be adequate for clear viewing and reproduction.

B. Digital photographs shall be in jpg or tiff format.

C. Digital images will be provided to the owner on a DVD with a transmittal letter.

1.5 IDENTIFICATION OF PHOTOGRAPHS

A. The following information shall be typed on the back of each print furnished and furnished in the properties of the electronic file for each digital photograph in a manner approved by the District's Engineer.

B. Image file names must contain work ID from activity it relates to, if applicable.

1.6 VIDEO RECORDINGS

B. The Contractor shall provide video recordings of all construction milestones and the following events:

1. Start of construction including clearing and demolition operations, as applicable; highlights of all formal inspections; and
2. Weekly updates of ongoing construction.

C. Video recordings shall be digital. DB Entity will submit proposed digital format to SMART for approval.

D. Video recordings shall include a complete, clearly spoken narration of the events being photographed. Also, video recordings shall include an unobtrusive time and date indicator on the film, accurately depicting the time and date when the photography was performed.

E. The Video recording files shall include the work ID from CPM activity it relates to.

F. Video recordings shall be submitted on DVD or CD and be accompanied by a Transmittal letter.

1.7 DISPUTES AND POTENTIAL CLAIMS

A. In the event a problem arises, or dispute occurs which may result in a Notice of Potential Claim under Article GC9.4.1 of the General Conditions the problem or dispute can be illustrated by photographs and video recordings, Contractor shall provide such photographs and video cassettes.

PART 2 — PRODUCTS

Not Used

PART 3 — EXECUTION

Not Used

END OF SECTION 01 32 33

SECTION 01 33 00 SUBMITTAL PROCEDURES

PART 1— GENERAL

1.1 SECTION INCLUDES

A. This section includes:

1. List of material sources
2. Design Submittal requirements
3. Product Submittal requirements

1.2 MEASUREMENT AND PAYMENT

A. Separate measurement or payment will not be made for work required under this Section. All costs in connection with the work specified herein will be considered to be included in the lump sum price or incidental to the Work.

1.3 LIST OF MATERIALS SOURCES

A. Contractor shall submit to the District's Engineer a list of Contractor's sources of materials. The list shall be submitted in sufficient time to permit proper inspections and testing of materials to be furnished from such listed sources in advance of their use.

1.4 DESIGN SUBMITTAL REQUIREMENTS

A. Design submittals will be submitted and reviewed in accordance with Program Requirement 2 and as follows:

1. CADD: Drawings shall be CADD generated, using Civil3D 2014 by AutoDesk, or an "owner approved equal." Hand-drawn sketches will not be accepted unless specifically requested and pre-approved by the Engineer. Design elements and objects shall retain design object properties, e.g. alignments, assemblies, etc.
2. Drawing Standards: Drawings shall be done in accordance with SMART drafting standards.
3. Organization: Each drawing shall be laid out in an organized manner such that it is easily understandable.
   a. All symbols and abbreviations used shall be defined on each drawing, or if submitted as a Drawing Package, on a master symbol sheet as described below.
   b. Each drawing shall include Contract name and number,

drawing name and number, revision number and date, name of Contractor

and Subcontractor originating the drawing, referenced technical baseline document, and other information required by the Title Block.

4. Signatures: Each drawing shall be checked and initialed by at least one of the project team's lead engineers in the corresponding technical discipline, the Project Manager (or District-approved representative), or the Quality Assurance Manager.

5. Changes and Deviations: Deviations from the Contract Documents shall be highlighted. Any aspect of design that would cause a change to other system or facility elements shall be highlighted and explained.

6. Drawing Packages:

   a. Each drawing package shall show all information necessary to demonstrate a comprehensive and cohesive design and conformance with all Contract Requirements.

   b. Each drawing package shall have an index sheet, symbol table, and list of abbreviations and definitions.

7. Documents:

   a. Electronic digital copies of all other documents (e.g., design documents, manuals) shall be provided. Files shall be submitted in a format fully compatible with and directly usable by Commercial- Off-The-Shelf word processors, spreadsheet programs, database programs, and drawing programs prevalent in the Microsoft Windows environment. Microsoft Office products (e.g., WORD, EXCEL, ACCESS) and VISIO formats are acceptable. Any other file formats are subject to approval of the Engineer.

8. Hardcopies:

   a. The Contractor shall submit the following at a minimum in each interim submittal as applicable:

      1) 3 Half Size (11"x17") sets of plans

      2) 3 Copies of all Documents and Calculations

   b. For the Issued for Construction (IFC) submittal:

      1) 5 Half Size (11"x17") sets of plans

      2) 2 Full Size (22"x34") set of plans

      2) 5 Copies of all Documents and Calculations

   c. The Contractor shall prepare additional copies of interim and IFC submittals for any third-party reviewing agency as required

by such third party.

9. SMARTBuzz

a. All submittals shall be uploaded to SMARTBuzz and organized in accordance with the District's SMARTBuzz administrator.

b. Version Control shall be implemented in accordance with the District's SMARTBuzz administrator.

B. Review Period and Review Process:

1. The DB ENTITY shall allow twenty-one (21) calendar days, excluding federal and state holidays, after receipt of design submittal by the Engineer for review of each design submittal, including resubmittals.

Not used.

1.5 PRODUCT SUBMITTAL REQUIREMENTS

A. Schedule of Submittals: Within ten calendar days after the effective date of Notice to Proceed, Contractor shall submit a completed submittal schedule and list of products for all items requiring the District's Engineer's review and approval, as follows:

1. Submittals, including description of the item and name of manufacturer, trade name and model number.

2. Specification reference.

3. Intended submission/resubmission date(s).

4. Order release date.

5. Lead time to delivery/anticipated delivery date(s).

6. Highlight any items that require expedited review to meet the project schedule.

B. These schedules shall be presented in a form acceptable to the District's Engineer in both electronic and hard copy versions and shall be updated and sent to the District's Engineer on a monthly basis. Identify all submittals that are required by the Contract Documents and determine the date on which each submittal will be submitted in conformance with the schedules specified in Section 01 32 16 - Construction Progress Schedules.

C. Professional Seal Required: Submittals involving engineering design services, such as shoring and underpinning, excavation support structures, falsework for concrete, fire protection system design, and load and design calculations, shall be sealed and signed in blue ink by a professional engineer, currently registered in the State of California, for the discipline involved.

1. Other submittals involving engineering design services, when specified or required by governing codes and regulations, shall be sealed and signed in blue ink by a professional engineer, currently registered in the State of California, for the discipline involved.

D. Review Period:

1. Prepare submittals sufficiently in advance so that approval may be given before commencement of related work.

2. Allow twenty-one (21) calendar days after receipt by the District's Engineer for review of each submittal, including resubmittals.

3. Contractor shall be responsible for determining whether third parties, including but not limited to private utilities, governmental entities, local jurisdictions, and utility Districts require longer review periods. When longer review periods are required by such entities, Contractor shall schedule the Work accordingly, so that the Work and project progress schedules are not adversely impacted.

E. Submittal Delivery: Ship submittals prepaid or deliver by hand directly to the District's Engineer.

F. Transmittal Form: Accompany submittals with a District-furnished transmittal form in duplicate containing the following information:

1. Contractor's name, address, and telephone number

2. Submittal number and date

3. Contract title and number

4. Supplier's, manufacturer's, or Subcontractor's name, address, and telephone number

5. Subject identification including Contract Drawing and Specification reference

G. Changes in Approved Submittals: Changes in approved submittals will not be allowed unless those approved submittals with changes have been resubmitted and approved, in the same manner as the original submittal.

H. Supplemental Submittals: Supplemental submittals initiated by Contractor for consideration of corrective procedures shall contain sufficient data for review. Make supplemental submittals in the same manner as initial submittals.

I. Submittal Log: Contractor shall maintain a current and accurate submittal log that will be presented at all team meetings. Contractor shall present submittal log format to SMART for review.

1.6 CONTRACTOR'S RESPONSIBILITIES

A. Contractor's Review and Approval:

1. Each submittal shall be reviewed and signed as reviewed and approved by Contractor prior to submission. Contractor's approval shall indicate review and approval with respect to the following responsibilities:

2. Contractor shall be responsible for:

    a. The correctness and completeness of the drawings, for shop fits and field connections, and for the results obtained by the use of such drawings.

    b. Verification of catalog numbers, and similar data.

    c. Determination and verification of field measurements and field construction criteria.

    d. Checking and coordinating information in the submittal with requirements of the Work and of the Contract Documents.

    e. Determination of accuracy and completeness of dimensions and quantities.

    f. Confirmation and coordination of dimensions and field conditions at the site.

    g. Safety precautions.

    h. Errors or omissions on submittals.

    i. Coordination and performance of work of all trades.

    j. Identification of deviation(s) from Contract requirements.

    k. Conformance with Contract requirements.

3. Contractor shall coordinate each submittal with the requirements of the Work, placing particular emphasis upon assuring that each submittal of one trade is compatible with other submittals of related work. Ensure submittal is complete with all relevant data required for review.

4. Contractor shall stamp, initial, or sign the submittal, certifying:

    a. Dimensional compatibility of the product with the space in which it is intended to be used.

    b. Review of submittals for compliance with Contract requirements.

5. Do not start work that requires approval by the District’s Engineer until submittals have been returned to Contractor with official indication that approval has been granted by the District’s Engineer.

6. If the submittal is designated to be sent to the District’s Engineer for information, approval by the designated approval authority shall take place before submission to the District’s Engineer.

7. Approval or acceptance of drawings and associated calculations by the District's Engineer shall not relieve Contractor from the responsibility for errors or omissions in the drawings and associated calculations, or from deviations from the Contract Documents.

8. Approval or acceptance by the District's Engineer shall not relieve Contractor of any responsibility, including responsibility for accuracy and agreement of dimensions and details.

B. Product Submittal Quantities: Refer to Contract Specifications Section 01 33 23 - Shop Drawings, Product Data, and Samples, for submittal quantities.

C. Review by the District's Engineer: One marked up reproducible set of drawings, one copy of product data, and one sample will be returned to Contractor as applicable.

D. Distribution of Submittals after Review: Distribute prints or copies of approved submittals, bearing the District's Engineer's or designated approval authority's stamp and signature, to Contractor's field office and the District's Engineer's field office; to affected and concerned Subcontractors, Suppliers, and fabricators; and to affected and concerned members of Contractor's workforce.

1.7 DISTRICT'S ENGINEER'S REVIEW

A. Submittals will be reviewed for conformance with requirements of the Contract Documents. Review of a separate item will not constitute review of an assembly in which the item functions. Review will not relieve Contractor from Contractor's responsibility for accuracy of submittals; for conformity of submittals to requirements of Contract Documents; for compliance with regulations, codes, statues, design criteria, or best practices; for compatibility of described product with other provided products and the rest of the system; or for prosecution and completion of the Contract in accordance with the Contract Documents.

B. Submittals shall be understood as being made for approval, unless otherwise specified, for example, as being made for information, record, or review. The District's Engineer will indicate its reviews of submittals and the action taken (approval and rejection) by means of its review stamp. The review stamp will be affixed by the District's Engineer, the action block will be marked, and the stamp will be signed in blue ink and dated.

C. The review-stamp action-block marks will have the following meanings:

1. The mark NO EXCEPTIONS TAKEN is not an approval but means that the submittal appears to conform to the respective requirements of the Contract Documents; that fabrication, assembly, manufacture, installation, application, and erection of the illustrated and described product may proceed; and that the submittal need not be resubmitted.

2. The mark EXCEPTIONS NOTED - RESUBMISSION REQUIRED is not an approval but means that the submittal appears to conform to the respective requirements of the Contract Documents, and that fabrication, assembly, manufacture, installation, application, and erection of the illustrated and described product may proceed after incorporation of the reviewer's corrections and verification by the District's Engineer that the reviewer's corrections have been properly incorporated in the submittal. Resubmission within the time period specified is also required if Contractor challenges the reviewer's corrections.

3. The mark REJECTED is a disapproval and means that the submittal is deficient to the degree that the reviewer cannot correct the submittal with a reasonable degree of effort, has not made a thorough review of the submittal, and that the submittal needs revision and is to be corrected and resubmitted.

D. Review stamps or other approval methods of the various designated approval authorities may not be the same as those of the District. Contractor shall work with the various designated approval authorities and shall obtain approvals in the clearest and most straightforward manner possible.

E. The design submittals shall be reviewed and approved in accordance with the Program Requirements.

PART 2 — PRODUCTS

Not Used

PART 3 — EXECUTION

Not Used

END OF SECTION 01 33 00

SECTION 01 33 23 SHOP DRAWINGS, PRODUCT DATA, AND SAMPLES

PART 1— GENERAL

1.1 SECTION INCLUDES

A. This section includes:

1. Submittals
2. Shop drawings
3. List of materials sources
4. Other submittals
5. Product data
6. Samples

1.2 MEASUREMENT AND PAYMENT

A. Separate measurement or payment will not be made for work required under this Section. All costs in connection with the work specified herein will be considered to be included with the related item of work in the Bid Schedule of the Bid Form, or incidental to the Work.

1.3 DEFINITIONS

A. Drawings: The term "Shop Drawings," as used herein, includes fabrication, erection and installation, application, layout, and setting drawings, lists or schedules of materials and equipment, manufacturer's standard drawings, wiring and control diagrams, all other drawings as may be required to show that the materials, equipment, and systems, and the positions thereof, comply with Contract requirements.

B. Product Data: The term "product data," as used herein, includes manufacturer- prepared descriptive literature, catalog sheets, brochures, performance data, test data, printed diagrams, schedules, illustrations, and other information furnished by Contractor or the various product and materials suppliers to illustrate and describe a product, material, system, or assembly for some portion of the Work.

C. Samples: The term "samples," as used herein, are physical examples which illustrate materials, equipment, colors, textures, finishes, functions, configuration, and work quality, and establish the standards of quality and utility by which the Work will be judged for approval.

1.4 SUBMITTALS

A. Refer to Section 01 33 00, Submittal Procedures, for submittal procedures.

B. Quantities:

1. Two full size bond prints of each drawing.

2. Two copies of manufacturers' standard schematic drawings.

3. Two copies of Contractor's or manufacturers' calculations, and six copies of manufacturers' standard data.

4. Two copies of manufacturers' printed installation, assembly, erection, application, and placement instructions.

5. Two of each sample item specified in the various Specification Sections, unless otherwise specified.

6. Two copies of inspection reports, test reports, and certificates of compliance.

7. Where submittals are submitted to the District's Engineer for information or record purposes, submit two copies.

8. Where permits and licenses and other such documents are obtained in the District's name, submit the original and one copy.

1.5 SHOP DRAWINGS

A. Drawings shall be prepared in accordance with ANSI Y14, Drafting Standards Manual, and the following requirements:

1. Drawings shall be limited to the following standard sizes in inches: Maximum size shall be 22 inches by 34 inches.

WIDTH (Vertical)	LENGTH (Horizontal)
8 1/2 inches (215.9mm)	11.0 inches (279.4mm)
11.0 inches (279.4mm)	8 1/2 inches (215.9mm)
11.0 inches (279.4mm)	17.0 inches (431.8mm)
17.0 inches (431.8mm)	22.0 inches (558.8mm)
22.0 inches (558.8mm)	34.0 inches (863.6mm) (Maximum)

2. Each drawing shall have the following information in the title block:

a. Drawing number, date, title, revision number, and sheet number.

b. Contract number, Contract sheet number, Contract page number.

c. Contractor's name.

d. Subcontractor/manufacturer name (if applicable).

e. Name of installation location.

3. Each drawing shall use symbols from one standard reference source. Contractor shall furnish a complete symbol list that includes non-standard symbols used on the drawing. Symbols used shall conform to the list of standard references as listed below:

   a. Institute of Electrical and Electronic Engineers (IEEE).

   b. National Electric Manufacturer's Association (NEMA).

   c. ANSI Y14: American National Standards Institute "Drafting Standards Manual".

   d. ANSI Y10: American National Standards Institute "Letter Symbols for Drafting".

   e. ANSI Y32: American National Standards Institute "Graphic Symbols for Drafting".

4. Each drawing shall include details necessary for the procurement, installation, maintenance, and repair of all components or facilities equipment provided. Change Order notices that are attached to drawings shall not constitute revised drawings. Each drawing shall include all changes and be upgraded to reflect the latest configuration.

B. Drawings shall be submitted in accordance with the following requirements:

1. The first drawings submitted by Contractor will be reviewed for conformance to the requirements herein. Once approval is given, Contractor shall use this approved drawing as the standard and prepare subsequent drawings to a quality equal to or better than the accepted standard.

2. Each drawing prepared and submitted for review shall have in the lower right-hand corner, just above the title block, a five-inch square blank space in which the District’s Engineer may indicate the action taken.

3. All final accepted drawings and catalog cuts shall be submitted to the District’s Engineer upon completion of the Work as specified in Section 01 78 39, Project Record Documents.

C. When specified, shop drawings shall be prepared and submitted electronically. Such drawings shall be created using AutoCAD in accordance with the District's Contract Drawing CADD Requirements (part of the SMART Facilities Standards, Appendices, District Technical Manuals). Shop drawings to be prepared and submitted electronically include shop drawings which will be utilized as illustrations and drawings in Operation and Maintenance Manuals.

1. The initial submittal of such shop drawings shall include electronic copies for review of their conformance with applicable drafting standards. The District’s Engineer will make the Contract Drawing CADD Requirements available upon request.

1.6 OTHER SUBMITTALS

A. Other submittals shall be furnished upon request for the District's Engineer's approval to verify compliance of all equipment and materials with the Contract Documents. These submittals shall include in addition to drawings: catalog cuts, certifications of compliance, or any other substantiating information or samples of material items as necessary.

1.7 PRODUCT DATA

A. Contractor shall modify manufacturers' standard diagrams, charts, illustrations, brochures, calculations, schematics, catalog cuts, and other descriptive data to delete information which is not applicable to the Contract. Contractor shall supplement standard information with additional information applicable to this Contract, and indicate dimensions, clearances, performance characteristics, capacities, wiring and other diagrams, and controls.

B. If Contractor utilizes drawings prepared by others, such drawings may include the standards and symbols of others if the drawings are a mix of existing product drawings and drawings prepared specifically for this Contract. In the event others provide drawings prepared specifically for this Contract, such drawings shall conform in symbols, media, and standards to Contractor's drawings.

C. Contractor shall modify the manufacturer's printed installation, erection, application, and placing instructions to delete information which is not applicable to the Contract.

D. Submittals shall include the following:

1. Date and revision dates.

2. Contract title and number.

3. Reference Contract Drawing numbers.

4. Applicable Contract Specification Section numbers.

5. Identification of product by either description, model number, style number, serial number, or lot number.

6. The names of Contractor, Subcontractors, Suppliers, and manufacturers as applicable.

7. Applicable standards, such as ASTM or Federal specification numbers.

E. Certificates of Compliance (COC):

1. The District's Engineer may permit the use of certain materials prior to sampling and testing if accompanied by a certificate of compliance stating that the materials involved comply in all respects with the requirements of the Contract Documents. The certificate shall be signed by the manufacturer of the material. A certificate of compliance shall be furnished with each lot of material delivered to the Work, and the lot so certified shall be clearly identified in the certificate.

2. All materials used on the basis of a certificate of compliance may be sampled and tested at any time. The fact that material is used on the basis of a certificate of compliance shall not

relieve Contractor of responsibility for incorporating material in the Work which conforms to the requirements of the Contract Documents. Any such material not conforming to such requirements shall be subject to rejection whether in place or not.

3. The District's Engineer reserves the right to refuse the use of material submitted for approval solely on the basis of a certificate of compliance.

4. The form of the certificate of compliance and its disposition shall be as accepted by the District's Engineer.

5. COC's must be delivered directly to the District's Engineer via email or facsimile prior to receiving on site. This may be a copy.

1.8 SAMPLES

A. Contractor shall furnish to the District's Engineer samples required by the Contract Documents. Samples shall be submitted without charge, with shipping charges prepaid. Materials for which samples are required shall not be used in the Work until accepted in writing by the District's Engineer.

   1. Sample Label: Each sample shall be labeled with the following data:

      a. Name, number, and location on project

      b. Name of Contractor

      c. Material or equipment represented, and location in the project

      d. Name of producer, brand, trade name if applicable, and place of origin

      e. Date of submittal

B. Contractor shall forward a letter in triplicate to the District's Engineer submitting each shipment of samples and containing the information listed on the Sample Label specified herein. Approval of a sample shall be only for the characteristics and use named in the submittal and approval and shall not be construed to change or modify any Contract requirement. Before submitting samples, Contractor shall assure itself that the materials or equipment will be available in the quantities required in the Contract, as no change or substitution shall be permitted after a sample has been approved unless such change or substitution is approved by the District's Engineer in writing.

C. Samples of material from local sources shall be taken by or in the presence of the District's Engineer. Samples taken otherwise shall not be considered for testing.

D. Inspection and tests will be made, but it is understood that such inspections and tests, if made at any point other than the point of incorporation in the Work, in no way shall be considered as a guaranty of approval of any material which may be delivered later for incorporation in the Work.

E. Accepted samples not damaged in testing may be incorporated in the finished work if marked for identification and accepted by the District's Engineer. Materials incorporated in the Work shall match the accepted samples.

F. Failure of any material to pass the specified tests shall be sufficient cause for refusal to consider, under the Contract, any further samples of the same brand, make, or source of that material. The District's Engineer reserves the right to disapprove any material which has previously proven unsatisfactory in service.

G. Samples of material delivered to the site or installed in place may be taken by the District's Engineer for testing. Failure of samples to meet Contract requirements shall annul previous approvals of the item tested.

PART 2 — PRODUCTS

Not Used

PART 3 — EXECUTION

Not Used

END OF SECTION 01 33 23

SECTION 01 35 14 OPERATING SYSTEM INTERFACE

PART 1- GENERAL

1.1 SECTION INCLUDES

A. This section includes the most recent edition of the SMART EIC/RWP Operations Manual.

1.2 MEASUREMENT AND PAYMENT

A. Separate measurement or payment will not be made for work required under this Section. All costs in connection with the work specified herein will be considered to be included with the related item of work in the Bid Schedule of the Bid Form, or incidental to the Work.

1.3 DEFINITIONS

Safety Monitor: A Qualified Person assigned to oversee the operational safety of Contractor or other outside agency work activity. Safety Monitors shall have successfully completed Safety Monitor training and field certification.

A. Operating System: Facilities, equipment and installations that are essential for normal railroad operations, including the trackway and equipment therein, train control rooms, communications equipment, and other equipment and elements of infrastructure essential for normal railroad operations.

B. Operating Envelope: That portion of the system wherein trains operate. Operating Envelope shall be understood to include all areas with operating railroad vehicles.

C. Train Clearance Envelope: The dynamic envelope within which SMART passenger or freight trains operate.

D. Window: District-approved time period during which active tracks are removed from 'service for construction purposes.

1.4 SMART OPERATING RULES AND PROCEDURES

A. Contractor shall comply with all requirements in the SMART EIC/RWP Operations Manual when working within the SMART right of way.

B. Employees of Contractor scheduled or expected to perform work within the Operating Envelope are required to have successfully completed, within the previous 12 months, SMART's prescribed training program for performing work under SMART's Operating Rule and Procedures. Coordinate training with SMART at least 2 weeks in advance of work. Contractor shall keep records of those successfully completing the course.

C. The Contractor should expect rail traffic at all times. Ensure all employees, including subcontractors and service agreement employees, have completed SMART's Roadway Worker Protection (RWP) Training course online prior to entering SMART ROW. Any employee who does not meet the required training, and retraining every 12 months, for up to four supervisory-level personnel, one of whom shall will be removed from the site at the contractors expense. No additional days or financial compensation will be allowed due to the removal of employees.

1. First violation: Remainder of working day

    a. Second violation: 5 working days

2. Third Violation: Permanent removal from job.

    a. Contractor shall have at least one supervisor on the project at all times, who shall be Contractor's Safety Representative for this Contract. Supervisors shall have successfully completed the District-provided training course within the previous 12 months. The trainees must pass the required exams to successfully complete the course. Contractor shall provide the same District- approved training for all other personnel expected to perform work within the operating envelope.

    b. A copy of the current SMART EIC/RWP Operations Manual (SOM) will be made available to Contractor. All activities within SMART's right of way shall comply with the SOM. Violations of the SOM will subject Contractor to prompt exclusion from the jobsite until Contractor demonstrates knowledge of proper compliance procedures to the satisfaction of the District. Such exclusion from the jobsite will not be grounds for any additional compensation nor for any extension of the Contract completion time.

3. First violation: Remainder of working day

4. Second violation: 5 working days

5. Third Violation: Permanent removal from job.

PART 2 — PRODUCTS

Not Used

PART 3 — EXECUTION

Not Used

END OF SECTION 01 35 14

SECTION 01 35 24 CONSTRUCTION SAFETY

PART 1— GENERAL

1.1 SECTION INCLUDES

A. This section includes:

1. Contractor's safety program.
2. First aid.
3. Emergencies and emergency procedures.
4. Protecting the general public.
5. Specific requirements.
6. Inspections by outside agencies.
7. Inspections by the District.
8. Work performed near existing operating right-of-way.
9. Hazardous materials encountered during construction.

1.2 MEASUREMENT AND PAYMENT

A. Separate measurement or payment will not be made for work required under this Section. All costs in connection with the work specified herein will be considered to be included with the related item of work in the Bid Schedule of the Bid Form, or incidental to the Work.

1.3 SUBMITTALS

A. Within 5 days of Notice to Proceed:

1. Submit to SMART for review and approval, Contractor's proposed Safety Representative's resume identifying his or her work experience and qualifications. The minimum qualifications shall be ten years of diversified construction safety experience, and five years' experience related to the Contract's scope of work. Contractor shall have received the District's Engineer's approval of Contractor's proposed Safety Representative prior to submitting the first monthly progress payment.

B. Due to the wide variety of the scope of work, Contractor may use more than one Safety representative. However, they must be identified by area of expertise.

C. Within 10 working days of Notice to Proceed:

1. Submit two copies of Contractor's Safety Program for review and approval. Contractor shall have received the District's Engineer's approval of Contractor's proposed Safety Program prior to submitting the first monthly progress payment.

1.4 CONTRACTOR'S SAFETY PROGRAM

A. Contractor's Safety Program shall incorporate Contractor's safety practices and procedures, as well as the requirements described herein including the following:

1. A disciplinary program.

2. A policy that prohibits rough or boisterous play and activity, gambling, the use of alcohol or drugs, and the possession of weapons on the construction site.

1.5 FIRST AID

A. Contractor shall provide emergency medical services including American Red Cross certified First Aid Representative(s) on the jobsite and an appropriate area designated for first aid to treat injured employees. First Aid Representatives shall be CPR certified.

B. Employees shall receive prompt first aid care when injured. Due to the remote locations of some of the work in this contract, Contractor shall submit a site emergency plan that will include emergency contact numbers, contingency for communication due to lack of cell reception and number of qualified First Aid representatives on-site. If Contractor is found to be in violation of their own safety program by SMART, Contractor shall suspend operations and conduct safety training. Contractor will not be granted additional working time or compensated for any costs incurred as a result of this training.

1.6 EMERGENCIES AND EMERGENCY PROCEDURES

A. Develop Emergency Procedures for any event that may occur for the following categories:

1. Fire

2. Employee injury

3. Property damage and damage to various utilities (such as, electrical, gas, sewage, water, telephone, or public roadways)

4. Earthquake

5. Public demonstrations

6. Bomb threats

7. Hazardous materials encountered

8. Toxic spills

9. Explosions

10. Vehicular accidents

B. The Emergency Procedures shall include, but not be limited to, the following:

1. Identification of the person responsible for handling an emergency.

2. Establishment of teams for handling each type of emergency.

3. Identification of the person responsible for making emergency call (preferably the ranking Supervisor present).

4. The requirement to conspicuously post a list of emergency phone numbers, along with information to be transmitted.

C. Update the Emergency Procedures when necessary.

D. Provide to the District's Engineer copies of the above Emergency Procedures.

E. Contact the District's Engineer immediately in the event a serious accident should occur.

F. Following an emergency, Contractor shall:

1. Secure the area as expediently as possible; and

2. Provide only those authorized representatives of the District and specific governmental agencies with an account of the nature of the emergency. Questions from media personnel should be referred to the District's Engineer.

G. Whenever Contractor requires emergency services, such as ambulance, Fire Department or Police, Contractor shall use the posted emergency numbers, in addition to 911, and also contact a District representative at: (707) 794 -3330 SMART

1.7 PROTECTING THE GENERAL PUBLIC

A. Contractor shall take the necessary steps to prevent injury to the general public, SMART employees, and SMART patrons, or damage to public property. The public shall be considered as any persons not employed by Contractor or its Subcontractors. Contractor shall adhere to the following requirements:

1. Work shall be performed outside of the designated work area only when specifically stated in writing by the District's Engineer.

2. Necessary steps shall be taken to protect and maintain work areas that interface with public sidewalks, station entrances (lobbies, corridors, and aisles), stairways, escalators, elevators, and station platforms.

3. All travel ways, access and egress points shall be maintained and clear of obstructions at all times.

4. Warning signs shall be conspicuously positioned, and a flag person shall be assigned when Contractor's equipment may be encountered by pedestrians or vehicles.

1.8 SPECIFIC REQUIREMENTS

A. Below are the specific requirements Contractor must meet on this project. Items omitted from this list are not exempt from CAL-OSHA, CPUC or FRA safety regulations. It is Contractor's responsibility to know and obey all laws and regulations set forth by the aforementioned agencies. Additionally, all fines, sanctions, and directions issued by these agencies shall be solely the responsibility of Contractor.

B. Work Areas: Contractor shall provide a safe work area for its employees. When unsafe conditions do exist, immediate abatement is required.

C. Work Practices: Contractor shall be responsible for assuring that its employees work safely and use the appropriate personal protective equipment.

D. Weekly "Toolbox" Meetings:

1. Contractor shall conduct weekly "toolbox" meetings (15 minutes minimum) for all employees. The purpose of these weekly meetings is to:

   a. Discuss observed accident trends and causes.

   b. Plan safety into the work activities.

   c. Take action to correct workers' safety concerns.

   d. Review emergency procedures with employees.

2. These meetings shall be documented, and such documentation forwarded to the District's Engineer within one week of the meeting.

E. Accident and Incident Reports: Provide District's Engineer with copies of all accident and incident reports within 24 hours of occurrence.

F. Cal/OSHA Permit and Registration Requirements: Submit copies of permits from the California Division of Occupational Safety for the following:

1. Erection or demolition of any building, falsework, scaffolding, or structure the equivalent of three stories or higher.

2. Performing any work related to hazardous materials.

3. Trenching as required.

4. Lifting operations.

5. Any other necessary OSHA required permits.

G. Personal Protective Equipment (PPE): Contractor's personnel, without exception, are required to wear certain PPE. Among these are:

1. Hard hats and green safety vests - mandatory.

2. Hearing protection - mandatory in all operations creating noise above 80dBA.

3. Eye protection - mandatory when performing tasks producing flying debris or when handling any chemicals.

4. Safety harness - meeting ANSI A10.14 and shall be worn and used when exposed to any fall of 4 feet or more in height, where the height cannot be properly guarded with rails or other means.

5. Work Boots – Leather with steel toes (if tunneling is performed, shoes shall be made of rubber with steel toes).

6. Shirts - only those with sleeves allowed; no tank tops or mesh shirts are allowed.

7. Respiratory protection - when required by law.

1.9 INSPECTIONS BY OUTSIDE AGENCIES

A. Contractor shall be subject to inspections by outside agencies, including Cal/OSHA. Contractor shall notify the District's Engineer immediately should citations, warnings or safety violations be issued and provide copies to the District's Engineer within 48 hours.

1.10 INSPECTIONS BY THE DISTRICT

A. Contractor shall cooperate with designated District representatives when conducting site inspections.

B. The District may periodically make quality assurance audits of Contractor's Safety Program.

1.11 WORK PERFORMED NEAR EXISTING OPERATING RIGHT-OF-WAY

A. For any construction equipment (such as cranes, concrete pump trucks, back hoes, and the like) that could encroach into the District's operating right-of-way, Contractor shall submit, and obtain approval by the District's Engineer, a plan describing the use of such equipment, and the necessary precautions to be taken to preclude any accidental encroachment of the right-of-way.

1.12 HAZARDOUS MATERIALS ENCOUNTERED DURING CONSTRUCTION

A. If unidentified contaminated materials are encountered during construction or an accident results in the release of hazardous materials, work shall be stopped, and the area evacuated and secured. Contractor shall immediately notify the District's Engineer. If necessary, Contractor shall take precautions to limit the contamination to the jobsite.

PART 2 — PRODUCTS

Not Used

PART 3 — EXECUTION

Not Used

END OF SECTION 01 35 24

SECTION 01 41 00 REGULATORY REQUIREMENTS

PART 1 GENERAL

1.1 SECTION INCLUDES

A. This section includes regulatory requirements applicable to Contract Documents.

B. Specific reference in the Specifications to codes and regulations or requirements of regulatory agencies shall mean the latest printed edition of each adopted by the regulatory agency in effect at the time of the opening of Bids, except as may be otherwise specifically stated in the Contract Documents.

C. Should any conditions develop not covered by the Contract Documents wherein the finished Work will not comply with current codes, a Change Order detailing and specifying the required Work shall be submitted to and approved by SMART before proceeding with the Work.

1.2 REFERENCES TO REGULATORY REQUIREMENTS

A. Codes, laws, ordinances, rules, and regulations referred to shall have full force and effect as though printed in full in these Specifications. Code, laws, ordinances, rules, and regulations are not furnished to Contractor, because Contractor is assumed to be familiar with these requirements. The listing of applicable codes, laws, and regulations for hazardous waste abatement Work in the Contract Documents is supplied to Contractor as a courtesy and shall not limit Contractor's responsibility for complying with all applicable laws, regulations, or ordinances having application to the Work. Where conflict among the requirements or with these Specifications occurs, the most stringent requirements shall be used.

B. Conform to referenced codes, laws, ordinances, rules, and regulations.

1.3 PERMITS

A. Permits, agreements, or written authorizations that are known by SMART to apply to this Project are listed in the bid solicitation documents.

1.4 LAWS, ORDINANCES, RULES, AND REGULATIONS

A. During prosecution of Work to be done under Contract Documents, comply with applicable laws, ordinances, rules, and regulations, including, but not limited to, the following:

1. Environmental, or other, required permits specific to the work as listed in the RFQ SCOPE OF WORK Project Permits list.

2. Precedence:

   a. Where Drawings or Specifications require or describe products or execution of better quality, higher standard or greater size than required by applicable codes, ordinances and

standards, Drawings and Specifications shall take precedence so long as such increase is legal.

b. Where no requirements are identified on Drawings or in Specifications, comply with all requirements of applicable codes, ordinances and standards of governing authorities having jurisdiction.

c. Conflicts between referenced regulatory requirements: Comply with the one establishing the more stringent requirement.

d. Conflicts between referenced regulatory requirements and Contract Documents: Comply with the one establishing the more stringent requirement.

1.5 REQUIRED PROVISIONS ON CONTRACT CLAIM RESOLUTION

A. The California Public Contract Code specifies required provisions on resolving contract claims less than $375,000, which are set forth below, and constitute a part of this Contract.

B. For the purposes of this section, "Claim" means a separate demand by Contractor of $375,000 or less for (1) a time extension, (2) payment or money or damages arising from Work done by or on behalf of Contractor arising under the Contract Documents and payment of which is not otherwise expressly provided for or the Claimant is not otherwise entitled to, or (3) an amount the payment of which is disputed by SMART. In order to qualify as a Claim, the written demand must state that it is a Claim submitted under paragraph 12 of Document 00 70 00 (General Conditions) and be submitted in compliance with all requirements of Document 00 70 00 (General Conditions), paragraph 12. Separate Claims which total more than $375,000 do not qualify as a "separate demand of $375,000 or less," as referenced above, and are not subject to this section.

C. A voucher, invoice, payment application, or other routine or authorized form of request for payment is not a Claim for purposes of this section. If such request is disputed as to liability or amount, then the disputed portion of the submission may be converted to a Claim under this section by submitting a separate claim in compliance with Contract Documents claim submission requirements.

D. Caution: This section does not apply to tort claims and nothing in this section is intended nor shall be construed to change the time periods for filing tort claims or actions specified by Chapter 1 and Chapter 2 of Part 3 of Division 3.6 of Title 1 of the California Government Code.

E. Procedure:

1. The Claim must be in writing, submitted in compliance with all requirements of Document 00 70 00 (General Conditions), Article 12, including, but not limited to, the time prescribed by and including the documents necessary to substantiate the Claim, pursuant to Document 00 70 00 (General Conditions), paragraph 12.3. Claims must be filed on or before the day of final payment. Nothing in this section is intended to extend the time limit or supersede notice requirements for the filing of claims as set forth in Document 00 70 00 (General Conditions), Article 12 or elsewhere in the Contract Documents.

2. For Claims of Fifty Thousand Dollars ($50,000) or less

a. SMART shall respond in writing within forty-five (45) days of receipt of the Claim, or

b. SMART may request in writing within thirty (30) days of receipt of the Claim, any additional documentation supporting the Claim or relating to any defenses or claims SMART may have against Claimant.

c. If additional information is thereafter required, it shall be requested and provided in accordance with this section, upon mutual agreement of SMART and Claimant.

d. SMART's written response to the Claim, as further documented, shall be submitted to Claimant within fifteen (15) days after receipt of further documentation or within a period of time no greater than taken by Claimant in producing the additional information, whichever is greater.

F. For Claims over Fifty Thousand Dollars ($50,000) and less than or equal to Three Hundred Seventy-Five Dollars ($375,000):

1. SMART shall respond in writing within sixty (60) days of receipt of the Claim, or

2. SMART may request in writing within thirty (30) days of receipt of the Claim, any additional documentation supporting the Claim or relating to any defenses or claims SMART may have against Claimant.

3. If additional information is thereafter required, it shall be requested and provided in accordance with this section, upon mutual agreement of SMART and Claimant;

4. SMART's written response to the Claim, as further documented, shall be submitted to Claimant within thirty (30) days after receipt of further documentation or within a period of time no greater than taken by Claimant in producing the additional information, whichever is greater.

G. Meet and Confer:

1. If Claimant disputes SMART's written response, or SMART fails to respond within the time prescribed above, Claimant shall notify SMART, in writing, either within fifteen (15) days of receipt of SMART's response or within fifteen (15) days of SMART's failure to timely respond and demand an informal conference to meet and confer for settlement of the issues in dispute. Upon demand SMART will schedule a meet and confer conference within thirty (30) days for settlement of the dispute.

H. Following the meet and confer conference, if the Claim or any portion remains in dispute, Claimant may file a claim as provided in Chapter 1 (commencing with Section 900) and Chapter 2 (commencing with Section 910) of Part 3 of Division 3.6 of Title 1 of the California Government Code. For purposes of those provisions, the running of the period of time within which a claim must be filed shall be tolled from the time Claimant submits its written Claim as set forth in paragraph 1.6.B above, until the time that Claim is denied as a result of the meet and confer process, including any period of time utilized by the meet and confer process.

1.6 COMPLIANCE WITH AMERICANS WITH DISABILITIES ACT (ADA)

A. Contractor acknowledges that, pursuant to the Americans with Disabilities Act (ADA), programs, services, and other activities provided by a public entity to the public, whether directly or through a contractor, must be accessible to the disabled public. Contractor shall provide the services specified in the Contract Documents in a manner that complies with the ADA and any and all other applicable federal, state, and local disability rights legislation. Contractor agrees not to discriminate against disabled persons in the provision of services, benefits, or activities provided under this Agreement and further agrees that any violation of this prohibition on the part of Contractor, its employees, agents, or assigns shall constitute a material breach of the Contract Documents.

B. Cal/OSHA Permit. Obtain, as applicable, permit(s) as required by Cal/OSHA for the following:

1. Construction of trenches or excavations that are five feet or more in depth and into which a person is required to descend.

2. Construction or demolition of any building, structure, or scaffolding for falsework more than three stories high, or the equivalent height (36 feet).

3. Erection or dismantling of vertical shoring systems more than three stories high, or the equivalent height (36 feet).

END OF SECTION 01 41 00

SECTION 01 42 19 REFERENCE STANDARDS

PART 1— GENERAL

1.1 SECTION INCLUDES

A. This section includes:

1. Reference standard file

2. Abbreviations

1.2 MEASUREMENT AND PAYMENT

A. Separate measurement or payment will not be made for work required under this Section. All costs in connection with the work specified herein will be considered to be included with the related item of work in the Bid Schedule of the Bid Form, or incidental to the Work.

1.3 REFERENCE STANDARDS

A. The Contract Documents contain references to various standard specifications, codes, practices, and requirements for materials, equipment, work quality, installation, inspections, and tests, which references are published and issued by the organizations, societies, and associations listed herein by abbreviation and name. Such references are hereby made a part of the Contract Documents to the extent specified in General Conditions Article GC1.2

B. Whenever a referenced standard contains administrative requirements, including measurement and payment provisions, such as the standard specifications of various government entities, utility Districts, and other agencies, such administrative requirements shall not apply to the Work of this Contract. References to such standards shall be applicable to the pertinent technical provisions only.

1.4 REFERENCED STANDARDS FILE

A. Referenced standards shall be obtained by Contractor and maintained in Contractor's office. Referenced standards shall be made readily available for use by the District’s Engineer and Contractor's staff in carrying out the quality assurance and quality control programs specified in the Contract Documents, and to assure compliance with the requirements of the codes, specifications, test methods, practices, and other standards referenced in the Contract Documents.

1.5 ABBREVIATIONS

A. Wherever in the Contract Documents an organization's abbreviation or acronym is used, it shall be understood to mean the full name of the respective organization as specified in General Conditions Article GC1.2, as specified in the various Baseline Document Sections, and as follows:

AA	Aluminum Association
AABC	Associated Air Balance Council
AAMA	American Architectural Manufacturers Association
AAN	American Association of Nurserymen
AAR	American Association of Railroads
AASHTO	American Association of State Highway and Transportation Officials
ACI	American Concrete Institute
AFBMA	Anti-Friction Bearing Manufacturer's Association
AIMA	Acoustical and Insulating Materials Institute
AISC	American Institute of Steel Construction
AISI	American Iron and Steel Institute
AMCA	Air Moving and Conditioning Association
ANSI	American National Standards Institute
APA	American Plywood Association
API	American Petroleum Institute
AREMA	American Railway Engineering and Maintenance of Way Association
ASHRAE	American Society of Heating, Refrigerating, and Air Conditioning Engineers, Inc.
ASME	American Society of Mechanical Engineers
ASQC	American Society for Quality Control
ASTM	American Society for Testing and Materials
AWPA	American Wood Preservers Association
AWPI	American Wood Preservers Institute

AWS	American Welding Society
AWWA	American Water Works Association
BHMA	Builders' Hardware Manufacturers Association
BSI	Building Stone Institute
Cal/OSHA	California Division of Occupational Safety and Health
Caltrans	State of California, Department of Transportation
CAMUTCD	California Manual on Uniform Traffic Control Devices
CLFMI	Chain Link Fence Manufacturers Institute
CMAA	Crane Manufacturer's Association of America
CRSI	Concrete Reinforcing Steel Institute
CPUC	California Public Utilities Commission
CS	Commercial Standards, United States Department of Commerce
DHI	Door and Hardware Institute
DOT	United States Department of Transportation
DSI	Dimensional Stone Institute
EEI	Edison Electric Institute
EIA	Electronic Industries Association
FGMA	Flat Glass Marketing Association
FM	Factory Mutual System
FRA	Federal Rail Authority
FS	Federal Specification
FTA	Federal Transit Administration
ICBO	International Conference of Building Officials
IEEE	Institute of Electrical and Electronics Engineers
IES	Illuminating Engineering Society

IMSA	International Municipal Signal Association
IPCEA	Insulated Power Cable Engineers Association
HE	Institute of Traffic Engineers
JIC	Joint Industrial Council
MUTCD	Manual on Uniform Traffic Control Devices (shall include California Revisions)
MIA	Marble Institute of America
NAAMM	National Association of Architectural Metal Manufacturers
NBFU	National Board of Fire Underwriters
NEBB	National Environmental Balancing Bureau
NEC	National Electrical Code
NEMA	National Electrical Manufacturers Association
NFPA	National Fire Protection Association
NLMA	National Lumber Manufacturers' Association
NRCA	National Roofing Contractors Association
NTMA	National Terrazzo and Mosaic Association
PCA	Portland Cement Association
PCI	Precast/Prestressed Concrete Institute
PDI	Plumbing and Drainage Institute
PG&E	Pacific Gas and Electric Company
PS	U. S. Product Standard
SCWA	Sonoma County Water Agency
SMACNA	Sheet Metal and Air Conditioning Contractors National Association, Inc.
SMART	Sonoma-Marin Area Rail Transit
SSPC	Steel Structures Painting Council
SWI	Sealant and Waterproofers Institute

TCA	Tile Council of America
UBC	Uniform Building Code of the International Conference of Building Officials
UL	Underwriters Laboratories Inc.
UMC	Uniform Mechanical Code
UPC	Uniform Plumbing Code
USBPR	United States Bureau of Public Roads
WCLA	West Coast Lumbermen's Association
WCLIB	West Coast Lumber Inspection Bureau
WIC	Woodwork Institute of California

PART 2 — PRODUCTS

Not Used

PART 3 — EXECUTION

Not Used

END OF SECTION 01 42 19

SECTION 01 43 00 QUALITY ASSURANCE

PART 1— GENERAL

1.1 SECTION INCLUDES

A. Requirements for the submittal of a Quality Assurance Plan.

1.2 RELATED SECTIONS

Not Used

1.3 MEASUREMENT AND PAYMENT

Not used

1.4 SMART QUALITY ASSURANCE PLAN (QAP)

B. Contractor shall submit a Quality Assurance Plan in accordance with the SMART Quality Assurance Plan to be provided by the District.

PART 2 – PRODUCTS

Not used

PART 3 — EXECUTION

Not used

END OF SECTION 01 43 00

SECTION 01 43 38 FIELD SAMPLES AND MOCK-UPS

PART 1— GENERAL

1.1 SECTION INCLUDES

A. This section includes field samples and mock-ups.

1.2 MEASUREMENT AND PAYMENT

A. Separate measurement or payment will not be made for work required under this Section. All costs in connection with the work specified herein will be considered to be included with the related item of work in the Bid Schedule of the Bid Form, or incidental to the Work.

1.3 FIELD SAMPLES AND MOCK-UPS

A. Field samples and mock-ups shall be prepared at the jobsite by the Contractor as specified in the various Sections of these Specifications. Affected finish work shall not be started until the Engineer has approved the field samples and jobsite mock- ups in writing.

B. Construct and prepare field samples and jobsite mock-ups at designated locations at the jobsite or on the structure as directed by the Engineer.

1. The Contractor shall have product manufacturers inspect and approve field samples and mock-ups that involve their materials, for proper application or installation of the materials in accordance with their respective instructions and recommendations for the conditions or circumstances involved in the application or installation.

2. The Contractor shall make arrangements with the respective product manufacturers to provide job or field service and shall include this requirement in the Quality Assurance Plan.

C. Construct or prepare as many additional samples and mock-ups as may be required, as determined by the Engineer, until desired features, textures, finishes, and colors are obtained. Approved samples and mock-ups shall serve as the standards of quality for the various affected units of work.

D. Preserve approved field samples and mock-ups for comparison purposes until the affected work is completed and accepted by the District. Finished work shall match the approved field samples and mock-ups.

1.4 NONCONFORMANCE

E. Completed work that does not exactly match approved field samples and

mock- ups will be rejected, and shall be replaced with work that does exactly match the approved field samples and mock-ups at the Contractor's expense.

F. If the Contractor elects to start work before the Engineer has approved the related field samples or mock-ups, the Contractor does so at the risk of having the work rejected by the Engineer without compensation.

1.5 REMOVAL AFTER COMPLETION

Not used

PART 2 — PRODUCTS

Not Used

PART 3 — EXECUTION

G. Field samples and mock-ups shall be removed from the jobsite and structures after completion and acceptance of the affected work or otherwise as directed by the Engineer.

END OF SECTION 01 43 38

(THIS PAGE LEFT INTENTIONALLY BLANK)

SECTION 01 45 00 CONSTRUCTION QUALITY CONTROL

PART 1— GENERAL

1.1 SECTION INCLUDES

A. This section includes:

1. Contractor's construction quality plan
2. Contractor's quality control representative
3. District’s Engineer's monitoring
4. District’s Engineer's inspections and tests
5. Contractor's quality control testing
6. Test reports
7. Quality control audits
8. Certificates of compliance

1.2 MEASUREMENT AND PAYMENT

A. Separate measurement or payment will not be made for work required under this Section. All costs in connection with the work specified herein will be considered to be included with the related item of work in the Bid Schedule of the Bid Form, or incidental to the Work.

1.3 SUBMITTALS

A. General: Refer to Section 01 33 00 - Submittal Procedures, for submittal requirements and procedures.

B. Construction Quality Plan: Submit Contractor's proposed Construction Quality Plan in advance of the Project Kick-off meeting specified in Section 01 31 19 - Project Meetings. Contractor's Construction Quality Plan will be reviewed by the District’s Engineer, who will provide comments to Contractor within 20 working days after its submittal. Contractor shall revise its plan in accordance with the review comments and resubmit as required. Contractor shall perform the Work in accordance with the approved plan.

C. Construction Quality Control Representative: Submit to the District’s Engineer for approval, within ten days after the effective date of the Notice to Proceed, the name, qualifications, experience, and resume of Contractor's proposed Construction Quality Control Representative as specified in Article 1.06 herein.

1.4 SOURCE OF MATERIALS

A. In accordance with Section 01 33 23 - Shop Drawings, Product Data, and Samples, Contractor shall notify the District's Engineer in writing of the sources from which Contractor proposes to obtain materials requiring District approval, certification, or testing.

1.5 CONTRACTOR'S CONSTRUCTION QUALITY PLAN

A. Contractor shall prepare a Construction Quality Plan which shall identify the Contract quality requirements for each activity and describe how Contractor intends to furnish that quality, including control testing, certifications, and records which Contractor intends to provide.

B. Contractor shall obtain approval from the District's Engineer of the Construction Quality Plan within 60 days after Contractor's receipt of the Notice to Proceed. Contractor shall obtain approval from the District's Engineer for Quality Plans for early activities prior to the start of such activities. Such plans shall be incorporated later in the overall Construction Quality Plan. The Construction Quality Plan shall include, but not be limited to, the following elements:

1. Training of personnel
2. Installation, inspection, examination, and test control
3. Control of measuring and test equipment
4. Material control
5. Control of non-conforming items
6. Subcontractor controls
7. Supplier and vendor controls
8. Documentation and records control
9. Special process control
10. Facility turnover

A. The Contractor shall implement a Three Phase Inspection and Testing Program as a part of the Construction Quality Plan for all major elements of work.

1.6 THREE-PHASE INSPECTION AND TESTING PROGRAM

B. Establish and implement a Three-Phase Inspection and Testing Program to assure that the proper preparations have been completed prior to performing certain definable features of the Work.

1. Generally, the definable features of work include such items as complex or critical operations, major construction activities, installation or

construction of elements of work, first efforts on selected features of work, and rework and repair operations.

C. The Three-Phase Inspection and Testing Program consists of preparatory phase meetings, initial phase inspections, and follow-up inspections.

1. Preparatory phase meetings are construction planning meetings, also known as pre-activity or pre-installation meetings, held before the start of a definable feature of the Work to verify the following:

   a. The latest available Working Drawings, design drawings, Specifications, and other construction documents being used.

   b. Submittals have been approved, studied, and understood.

   c. The necessary Materials and equipment are on hand.

   d. The personnel proposed to perform the phase of the Work discussed are qualified to perform it, are fully prepared, and understand the applicable procedures and requirements to accomplish the work phase.

   e. The Contractor quality control inspections and tests to be performed during this phase of the Work have been planned and documented, and pass/fail criteria for inspection and test procedures have been clearly identified.

2. During preparatory phase meetings, refine the process control documents that list the work operations and the inspections and tests to be performed by the Contractor.

   a. Complete the Preparatory Phase Checklist and Quality Control Inspection Checklist/Procedure forms as appended to this Section prior to each preparatory phase meeting, and refine these documents at the preparatory phase meeting.

   b. Other interested parties participating in the preparatory phase meetings such as AGENCY, utilities, City representatives, and other construction contractors can integrate their work operations and inspections into the phase of the Work discussed.

3. At the outset of construction on each separate feature of the Work, perform an initial phase inspection led by the Contractor's quality control staff in the presence of the Resident Engineer to assure that the work is being accomplished in accordance with the plan developed at the preparatory phase meeting and with the Contract requirements.

4. Perform follow-up inspections using Contractor quality control staff

while the work is in progress to ascertain if the controls established in the earlier preparatory phase meeting and initial phase inspection continue to provide work that conforms to the Contract requirements.

D. Apply three-phase inspection and testing to all major elements of the Work:

1. Identify the specific features of work and the extent to which they will be subjected to the Three-Phase Inspection and Testing Program in the Inspection and Test Plan (I & TP).

2. Include additional elements of the Work in the Three-Phase Inspection and Testing Program as required by AGENCY at any time throughout the life of the Contract.

3. Have the Contractor Quality Control Manager document the preparatory, initial, and follow-up inspections and tests, and submit these records to the Resident Engineer no later than noon of the work day after the inspection and testing was performed along with the Daily Quality Control Report.

E. Participation by AGENCY or any other interested parties in the Three- Phase Inspection and Testing Program does not relieve the Contractor from any contractual requirements.

F. The Resident Engineer will track the results of Three-Phase Inspection and Testing Program inspections to establish the Contractor's quality performance history.

1. AGENCY may increase or decrease the number and types of three-phase inspections and tests based on the quality performance history of the Contractor.

1.7 CONTRACTOR'S QUALITY CONTROL REPRESENTATIVE

A. Contractor shall assign a Quality Control Representative to monitor the quality of construction activities.

B. In addition to persons performing or directly supervising the Work, Contractor shall use qualified persons for quality verification and audits. These employees shall be free from the pressure of costs, construction scheduling, and production, and shall have the necessary authority to perform their roles effectively.

C. Contractor shall define the responsibility and authority of personnel primarily responsible for performing quality verification and audits. Include responsibility and authority to perform the following:

1. Identify and record nonconforming items or conditions,

2. Initiate and recommend correction through appropriate channels,

3. Verify correction or implementation of solutions to correct nonconforming items or conditions, and

4. Prevent or control further nonconformance.

1.8 DISTRICT'S ENGINEER'S MONITORING

A. The District's Engineer will perform surveillance inspection of Contractor's on-site construction activities. Surveillance inspection consists of a review, observation, or inspection of Contractor personnel, material, equipment, processes, and test results, performed at random or at selected stages of the construction operations. The purpose of surveillance inspection is to determine if an action has been accomplished or if documents have been prepared in accordance with selected requirements of the Contract Documents.

B. Contractor shall provide access to the Work and shall furnish the District's Engineer reasonable facilities for obtaining such information as may be necessary to be fully informed of the quality and progress of the Work.

C. Surveillance inspection does not take the place of Contractor's quality programs or assume any responsibility for such programs or the quality of the Work. Contractor shall establish its own quality program, perform the required inspections, and provide the necessary documentation to assure that acceptable quality has been achieved. Contractor is responsible for specifying and controlling the quality of work performed by its Subcontractors.

1.9 DISTRICT'S ENGINEER'S INSPECTIONS AND TESTS

A. The District's Engineer may perform inspections and tests as necessary to determine Contractor's compliance with Contract requirements. The District's Engineer may perform such additional inspections and tests as the District deems necessary, and at times of the District's convenience, to verify compliance with Contract requirements.

B. For inspections and tests by the District's Engineer, the District's Engineer will provide the services of a qualified testing laboratory, soils engineer, or inspector, selected and paid for by the District.

C. The District's Engineer or a District-employed testing laboratory will supervise the preparation and selection of samples required for testing.

D. Contractor shall provide such facilities and assistance as the District's Engineer, or the testing laboratory may require for obtaining the necessary samples.

1.10 CONTRACTOR'S QUALITY CONTROL TESTING

A. Scope: Contractor shall perform quality control inspections and tests as necessary to ensure compliance with Contract requirements.

B. Testing Services:

1. Quality control testing is the testing of materials prior to their delivery from a manufacturer, or during construction, such as soils compaction tests, load tests, concrete tests during placement, concrete strength tests, pipe leakage tests, and such other tests as are specified in the various Sections of the Specifications to ensure compliance with the Contract Documents. Contractor shall assume full responsibility for quality control testing and shall give sufficient notice to the District's Engineer to permit the District's Engineer to witness the tests.

2. Quality control testing shall be at the expense of Contractor and shall be performed by a Contractor-employed independent testing firm.

3. Contractor shall submit the name, address, and qualifications, together with the scope of proposed services, of the proposed testing firm to the District's Engineer for approval at least 30 days prior to the scheduled commencement of any work involving such testing. Should Contractor desire to use more than one firm for quality control testing, the required information shall be submitted for each such proposed firm.

G. Laboratory Tests: All laboratory testing shall be at the expense of the Contractor, and be performed by an independent, qualified testing laboratory approved by the Engineer. The selected laboratory shall employ the proper equipment and qualified testing personnel for the testing specified in these Specifications. The Contractor shall obtain the Engineer's approval of the testing equipment and personnel. The Engineer may monitor the operations to ensure that tests are being performing in accordance with approved procedures and in compliance with these Specifications.

C. Qualification of Laboratory Testing Personnel: Personnel performing laboratory tests shall be qualified for such work by virtue of prior experience and training.

D. Testing Equipment: Testing equipment shall be in satisfactory operating condition, of adequate capacity and range, and accurately calibrated. Testing equipment shall be calibrated in accordance with national standards which are certified by the National Institute of Standards and Technology. Testing equipment shall be calibrated at the frequency recommended by the equipment manufacturer.

E. Test Program Plan:

1. Contractor shall prepare a Test Program Plan identifying the approach for accomplishing each of the specified tests. A narrative shall be prepared for each test specified, describing the test set-up, equipment, and instrumentation that will be used; procedure to be implemented; and the anticipated, as well as acceptable, test results. Drawings showing the relationship of the test sample and all significant components of the test equipment shall be included, as necessary, to describe the test set-up and procedure. The Test Program Plan shall include the test sequencing.

2. Equipment specifications and calibration methods for all testing equipment shall be included in the Test Program Plan.

3. Identity and qualifications of personnel who will perform testing shall be included in the Test Program Plan.

4. The Test Program Plan shall include the proposed format for reporting test data.

5. The projected schedule for test procedure submittals, test executions, and test results' report submittals shall be included in the Test Program Plan.

F. After approval of the Test Program Plan, any proposed changes will require approval of the District's Engineer prior to implementing the change.

1.11 TEST REPORTS

A. Within five days after completion of testing performed by or for Contractor, submit test results of such tests to the District's Engineer. Identify test reports with the information specified for submittals in Section 01 33 00 - Submittal Procedures, and, additionally, the name and address of the organization performing the test, and the date of the tests. Test reports shall include the following information:

1. Actual test results compared with the Contract requirements and identification of all nonconforming items.

2. Calibration Certificates.

B. The District's Engineer will make available to Contractor copies of all test reports of tests performed by the District's Engineer.

1.12 QUALITY CONTROL AUDITS

A. The District's Engineer may perform quality control audits of Contractor's, Subcontractor's, and Supplier's quality records and performance. Contractor shall ensure that all quality control records and places of work are open and available to the District's Engineer for inspection. The District's Engineer will give 30 days' notice of intention to audit specific activities or installations.

B. Contractor, Subcontractor, or Supplier being audited shall be available during the audit as required by the audit team.

1.13 CERTIFICATES OF COMPLIANCE

A. Contractor may use certificates of compliance for certain materials and products in lieu of the specified sampling and testing procedures. Submit any certificates required for demonstrating proof of compliance of materials with specification requirements with each lot of material delivered to the Work. The lot so certified shall be clearly identified by the certificate. Certificates shall be signed by an authorized representative of the producer or manufacturer and shall state that the material complies in all respects with Contract requirements.

B. The Project Schedule specified in Section 01 32 16 - Construction Progress Schedule, shall indicate the date scheduled for the submittal of certificates. In the case of multiple shipments, each of

which shall be accompanied by a certificate of compliance, the scheduled date on the Project Schedule shall indicate the initial submittal only.

C. The certificate of compliance shall be accompanied by a certified copy of the test results or shall state that such test results are on file with the producer or manufacturer and shall be furnished to the District on request. The certificate shall give the information specified for submittals in Section 01 33 00 - Submittal Procedures, the name and address of the organization performing the tests, the date of the tests, and the quantity of material shipped.

D. Materials used on the basis of a certificate of compliance may be sampled and tested by the District's Engineer at any time. The fact that material is used on the basis of a certificate of compliance shall not relieve Contractor of its responsibility for incorporating material in the Work which conforms to the requirements of the Contract, and any such material not conforming to such requirements will be subject to rejection, whether in place or not.

E. The District reserves the right to refuse to permit the use of certain materials on the basis of a certificate of compliance.

PART 2 — PRODUCTS

Not Used

PART 3 — EXECUTION

Not Used

END OF SECTION 01 45 00

SECTION 01 45 24 TESTING PROGRAM REQUIREMENTS

PART 1- GENERAL

Not Used

PART 2 - PRODUCTS

Not Used

PART 3 - EXECUTION

Not Used

END OF SECTION 01 45 24

SECTION 01 51 00 TEMPORARY UTILITIES

PART 1- GENERAL

1.1 SECTION INCLUDES

A. This section includes:

1. Temporary electrical facilities
2. Temporary water
3. Temporary heat

1.2 RELATED SECTIONS

A. Temporary toilet conveniences, washing facilities, and drinking water are specified in Section 01 52 00 - Construction Facilities.

1.3 MEASUREMENT AND PAYMENT

A. Separate measurement or payment will not be made for work required under this Section. All costs in connection with the work specified herein will be considered to be included with the related item of work in the Bid Schedule of the Bid Form, or incidental to the Work.

1.4 REFERENCES

A. State of California, Department of Transportation (Caltrans), 2018 Standard Specifications.

1.5 TEMPORARY ELECTRICAL FACILITIES

A. Electrical Services: Provide and maintain during the course and progress of the Work all electrical power and wiring requirements to facilitate the work of all trades and services associated with the Work. Electrical power shall be provided at Contractor's expense. Contractor shall request the utility company to install temporary power poles in locations required. All temporary wiring, feeders, and connections shall be furnished by Contractor, as required.

B. Falsework Lighting: Falsework lighting shall comply with the requirements of Caltrans Standard Specifications, Section 48 "Falsework Lighting." Contractor shall submit a plan of the proposed falsework lighting installations in accordance with the submittal requirements of Section 01 33 00 - Submittal Procedures.

1.6 TEMPORARY WATER

A. Provide temporary water service as required for the Work, at Contractor's expense. Closest availability of water shall be determined by Contractor and shall be approved by authorities having jurisdiction before making the connection.

B. Provide temporary piping or hose to carry water to every point where needed. All water used shall be potable water, unless otherwise approved by the jurisdictional authority for a specific purpose.

1.7 TEMPORARY HEAT

A. Provide, at Contractor's expense, temporary heat as necessary for drying out the station facilities and other structures, curing of concrete, the proper installation of materials, and the protection of the Work, materials, and workers against injury from dampness and cold.

B. Fuel, equipment, and methods of heating shall be approved by the jurisdictional fire marshal before use.

PART 2 — PRODUCTS

Not Used

PART 3 — EXECUTION

3.1 CLEANUP

A. Remove all materials and equipment as a part of final cleanup.

END OF SECTION 01 51 00

SECTION 01 52 00 CONSTRUCTION FACILITIES

PART 1- GENERAL

1.1 SECTION INCLUDES

A. This section includes:

1. Temporary sanitary facilities.
2. District's Engineer's field office.
3. Contractor's field office.
4. Storage and parking areas.
5. Enclosed storage and shops.
6. Protective barricades and safety precautions.
7. Temporary fencing.
8. Security.

1.2 MEASUREMENT AND PAYMENT

A. Separate measurement or payment will not be made for work required under this Section. All costs in connection with the work specified herein will be considered to be included with the related item of work in the Bid Schedule of the Bid Form, or incidental to the Work.

1.3 GOVERNING LAWS

A. Temporary facilities shall be in compliance with applicable federal, state, county, municipal, and local utility laws, rules, and regulations. Nothing in these Contract Documents shall be construed to permit work not conforming with such codes and regulations.

1.4 TEMPORARY SANITARY FACILITIES

A. Provide adequate temporary toilet conveniences, washing facilities, and drinking water for the use of all employees and persons engaged in or about the Work, including Subcontractors and their employees. Drinking water shall be potable and drinking water facilities shall be clean and sanitary.

B. Not Used

C. Locate sanitary facilities where approved by authorities having jurisdiction and maintain in a clean and sanitary condition during the course of the Work. Keep such facilities adequately supplied with toilet paper, paper towels, paper cups, and related supplies as required.

D. At completion of the Work, sanitary facilities shall be properly disinfected and all evidence of same removed from the site.

1.5 DISTRICT FIELD OFFICE / OPERATIONS TRAILER

Not Used

1.6 CONTRACTOR'S FIELD OFFICE

A. The DB ENTITY shall provide a field office for the exclusive use of District personnel. The DB ENTITY shall furnish and install an ADA-accessible modular unit ("construction trailer") not smaller than 12 feet wide by 40 feet long on jack stand foundations with decorative skirting for exclusive use by SMART personnel. Such modular unit shall become the District's property upon Final Acceptance. Such modular unit shall be equipped with not less than two individual offices, one conference room, and one restroom. Each office shall be equipped with one desk, two ergonomic chairs, and separate telephone line. Conference room shall be equipped with table, six chairs, and two separate telephone lines. Utilities shall include 120VAC electric convenience outlets (15 Ampere minimum per outlet), 300 MB/S wireless Ethernet, running potable water, flush toilet, and connection to sewer system. The modular unit shall be equipped with air conditioning and heat. The modular unit shall be cleaned at the DB ENTITY's expense not less frequently than weekly. The DB ENTITY shall pay the cost of all utilities and cleaning until final acceptance. The field office shall be located at the XXXXXX site, as indicated in the Baseline Documents.

A. The Contractor shall provide and maintain, in good condition, on the site or near the site as approved by the Engineer, a temporary field office of suitable size for construction administrative operations and consultations with representatives of the District.

B. The Contractor's field office shall contain a complete set of Contract Documents.

C. The Contractor shall make arrangements and pay all costs, including service and toll charges, until Substantial Completion of the Work, for temporary telephone service in the temporary field office, for use by the Contractor and Subcontractors, for purposes related to the Work.

1.7 STORAGE AND PARKING AREAS

A. The Contract Drawings may indicate work areas available to Contractor for storage of materials and for parking of construction equipment. If so indicated, these areas will be provided to Contractor for the durations indicated in the Contract Specifications. Additional work and storage space, if required, shall be provided by Contractor at Contractor's expense.

B. Contractor shall provide parking facilities for Contractor's personnel, Subcontractors, supplier's delivery vehicles, and authorized visitors. Off-site parking facilities (if any) shall not impair or interfere with existing community parking and traffic conditions, regulations, and restrictions.

1.8 ENCLOSED STORAGE AND SHOPS

A. Contractor shall provide all temporary storage and shop rooms that may be required at the jobsite for safe and proper storage of tools, materials, and equipment. Construct such rooms only in locations indicated or as approved by the District's Engineer, and so as not to interfere with the proper installation and completion of other work.

B. Remove such rooms within three days of receipt of notices from the District's Engineer that removal is necessary and incur all expenses for such removal.

C. Storage of gasoline or similar fuels shall conform to NFPA regulations and local fire department regulations and shall be confined within definite boundaries apart from buildings as approved by the District's Engineer and the jurisdictional fire marshal.

1.9 PROTECTIVE BARRICADES AND SAFETY PRECAUTIONS

A. Construct and maintain barricades, lights, shoring, and warning signs as required by Federal and State safety ordinances and as required to protect the District's property from injury or loss and as necessary for the protection of the public and adjacent properties. Provide walks around obstructions made in a public place for prosecuting the Work. Leave all protection in place and maintain until removal is authorized.

B. Guard and protect all workers, pedestrians, and the public from excavations, construction equipment, obstructions, and other dangers with adequate railings, guard rails, temporary walks, barricades, warning signs, directional signs, overhead protection, planking, decking, danger lights, and other suitable safeguards.

C. Flaggers shall be provided to direct or divert pedestrian or vehicular traffic when necessary, as specified in Section 01 57 00 - Temporary Controls.

D. Additional safety requirements are specified in Section 01 35 24 - Construction Safety.

1.10 TEMPORARY FENCING

A. Contractor shall furnish, construct, maintain, and later remove temporary fencing around the jobsite perimeter as indicated.

B. Except as otherwise specified herein, temporary fencing shall conform to Specifications Section 32 31 13 - Chain Link Fences and Gates.

C. Used materials may be employed for temporary fencing, provided such used materials are good, sound, and are suitable for the intended purpose.

D. Fencing materials may be commercial quality, provided the dimensions and sizes of said materials are equal to, or greater than, the dimensions and sizes indicated in Specifications Section 32 31 13 - Chain Link Fences and Gates. Additional fencing options include the following:

1. Posts may be either metal or wood.

2. Galvanizing and painting of steel items will not be required.

3. Treating wood with wood preservatives will not be required.

4. Concrete footings for metal posts will not be required, except where portable footings are required for temporary anchorage of posts.

E. Temporary fencing that is damaged from any cause during the progress of the Work shall be repaired or replaced by Contractor at no additional cost to the District.

F. When no longer required for the Work, temporary fencing shall be removed. Removed fencing and related materials shall become the property of Contractor and shall be removed from the jobsite, except as otherwise provided herein.

G. Holes caused by the removal of temporary fences shall be properly filled to match adjacent surfaces.

1.11 SECURITY

A. Contractor shall provide for security of the Work and the jobsite until final inspection and Acceptance of the Work. Storage areas shall be suitably fenced and lighted and routinely patrolled by security guards.

B. The District assumes no responsibility for protection of structures and finished work or for loss of materials and equipment from the time that Contract operations have commenced until Acceptance of the Work.

C. If watchman service is deemed necessary by Contractor, such protection shall be provided by Contractor, and all costs therefore shall be paid for by Contractor.

D. Damaged, lost, or stolen materials and equipment, whether or not stored or already installed, shall be replaced by Contractor with new specified materials and equipment, including reinstallation where applicable, at no additional cost to the District.

PART 2 - PRODUCTS

Not Used

PART 3 - EXECUTION

3.1 CLOSEOUT

A. Upon completion of the Work, or prior thereto when required by the District’s Engineer, remove temporary facilities' structures and installations from the District's property.

B. Return exterior areas utilized for temporary facilities to their original, natural state or, when called for on the Contract Documents, complete such areas as indicated.

C. Computers from the District field office shall become the property of the District and shall be delivered to the District offices.

END OF SECTION 01 52 00

SECTION 01 57 00 TEMPORARY CONTROLS

PART 1— GENERAL

1.1 SECTION INCLUDES

A. This section includes:

1. Traffic plan and controls.
2. Construction operations under traffic.
   a. Please see attachment XXXXXX
3. Portable changeable message sign.
4. Pollution abatement.
5. Erosion and sediment control.
6. Dust control.
7. Mud control.
8. Noise control.

1.2 MEASUREMENT AND PAYMENT

A. Separate measurement or payment will not be made for work required under this Section. All costs in connection with the work specified herein will be considered to be included with the related item of work in the Bid Schedule of the Bid Form, or incidental to the Work.

1.3 REFERENCES

A. State of California, Department of Transportation (Caltrans), Standard Specifications: Section 12 - Construction Area Traffic Control Devices.

B. State of California, Department of Transportation (Caltrans), California Manual of Uniform Traffic Control Devices (California MUTCD), Part 1, Temporary Traffic Control.

C. State of California, Vehicle Code.

D. American National Standards Institute (ANSI) S 1.4: Specification for Sound Level Meters.

1.4 TRAFFIC PLAN AND CONTROLS

A. Traffic Plan and Permits:

1. Contractor shall submit traffic control plans, haul routes or other plans as required by permits issued by local agencies or utility companies. Contractor shall submit a copy of all correspondence with local jurisdictions regarding permits and work within their ROW.

B. Control Devices and Facilities:

1. Furnish, install, operate, maintain, and remove when no longer required, all traffic control and protective devices required for the approved traffic plan.

2. Traffic control and protective devices shall include temporary directional electrical warning signs, detour signs, and danger signals; temporary barricades and guard rails; crash cushions; temporary lighting, overhead warning lights and flashing lights; temporary pavement markings, and removal of permanent and temporary pavement markings; and the services of qualified flaggers.

3. Maintain communication with the jurisdictional agency(s) regarding Contractor's operations in maintaining and controlling traffic.

C. Traffic Control Signs: Each change in location of traffic shall be adequately posted with signs mounted on barricades or standard posts in accordance with the requirements of Caltrans Standard Specifications, Section 12. Temporary "No Parking" signs that are to be used for short periods will be provided by local authorities. Contractor shall make arrangements for providing temporary no parking signs.

D. Pavement Marking: Install necessary temporary and permanent pavement marking as required in connection with the temporary street work and remove or obliterate existing or temporary pavement markings whenever vehicle traffic is moved to a newly available pavement area or to different traffic patterns. Refer to Section 32 17 23 - Pavement Markings, for requirements.

E. Prior to starting work on each phase requiring traffic control, demonstrate to the satisfaction of the District’s Engineer that necessary materials, equipment, and personnel are on site and that, once started, work can be completed in an expeditious manner without interruptions.

F. Redirecting Traffic:

1. All channelizing, shifting of traffic lanes, and barricading of traffic in connection with the Work will be subject to approval of the appropriate jurisdictional agency. Existing local standards for signing and marking of construction areas will apply in addition to the requirements of Caltrans Standard Specifications, Section 12.

2. When required by the Contract Specifications, or indicated on the Contract Drawings, or required by responsible public agencies, Contractor shall construct, maintain, and remove detours and detour bridges for the use of public traffic.

3. Failure or refusal of Contractor to construct and maintain detours at the proper time shall be sufficient cause for closing down the Work until such detours are in satisfactory condition for use by public traffic.

G. Temporary Closing to Traffic: Prior to temporary closing to traffic of any street, sidewalk, or other access, or to changing traffic patterns from those indicated on the Contract Drawings, obtain approval from appropriate jurisdictional authority, and comply with imposed conditions, at least two weeks before such closures or changes are made. Deviations will be for an emergency condition affecting life and property only, and Contractor shall immediately notify the District's Engineer and the appropriate jurisdictional authority of any such emergency changes. Copies of all approvals shall be furnished to the District's Engineer.

H. Temporary Walkways: In areas where removal of existing sidewalks is necessary, access to adjacent businesses, entrances, and properties shall be maintained by temporary walkways having a width of not less than 4 feet.

I. Intersections and Street Crossings: Intersections and street crossings shall be excavated and decked in stages as indicated. Construction shall be phased so that the required number of traffic lanes on each street will be provided at all times during these operations. Upon completion of decking installation, traffic in all directions shall be fully maintained. Trenches or open excavations shall be properly bridged where traffic lanes are to be open to traffic.

J. Temporary Paving and Patching: Construct, maintain, and remove temporary pavement and patching required to handle vehicle and pedestrian traffic safely and expeditiously, within or adjacent to the jobsite. Temporary pavement and patching composition shall conform to the specifications of the local jurisdictional authority. Any construction, maintenance, or removal required by Contractor's operations off site shall conform to the requirements specified herein.

K. New and Existing Traffic Control Devices:

1. Contractor shall arrange with the respective county and municipal authorities to provide governmental services as required for salvaging reusable street-name and traffic signs, removal of parking meters, and for removal, relocation, and adjustment of traffic signals.

2. Contractor shall provide such work and construction services as may be required by county and municipal authorities to assist in salvaging reusable street-name and traffic signs, removing of parking meter posts and bases, and removing, relocating, and adjusting of traffic signals, all in accordance with jurisdictional standards and regulations.

1.5 CONSTRUCTION OPERATIONS UNDER TRAFFIC

A. Definitions: "Construction equipment" is defined for the purposes of this Article as all types of equipment, vehicles, and tools used in connection with construction work. The term "workers" includes every person or firm performing work in or adjacent to public streets.

B. Construction Equipment: When in traffic lanes, all vehicles and equipment shall be operated at normal traffic speeds. If this is not practicable, a slow-moving vehicle emblem shall be displayed in accordance with the California Vehicle Code. Construction equipment shall not be parked in any lane intended for use by normal traffic. Equipment parked or stored at the work site shall be behind a guard rail, barrier, curb, or other protective device.

C. One-Way Traffic: No construction equipment shall be operated in traffic lanes, except in the designated direction of travel for respective lanes.

D. Construction Operations:

1. Schedule surface operations so that work is not carried on intermittently throughout the area. Excavation or construction activities shall be scheduled and pursued to completion as required to permit opening of street areas to traffic without unnecessary delays.

2. No construction work involving occupancy of traffic lanes shall be performed during adverse weather conditions or adverse road conditions, and traffic shall be properly safeguarded by the use of flashers and lights in addition to the signs and other markings specified herein. During these periods, no construction deliveries shall take place over a travel lane or immediately adjacent thereto.

3. When traffic conditions dictate, Contractor shall modify its work operation for such length of time as required to alleviate the hazardous traffic conditions.

E. Equipment Travel:

1. No construction equipment other than that designated and used for general highway transportation shall be moved on streets during hours of darkness or periods of adverse weather conditions that reduce normal visibility.

2. Any construction equipment or material required for construction operations which exceeds the maximum vehicle dimensions specified in the Motor Vehicle Code, shall be moved only in accordance with established State and local regulations. No such oversize load shall be moved over public streets without first obtaining approval of the appropriate jurisdictional authority.

F. Crossing Traffic Lanes: Construction equipment entering the traveled way from the median shall be safeguarded by a portable changeable message sign and with flaggers as required. Where traffic speeds are high, slow-moving construction equipment entering the traveled way shall be protected by a "rolling barricade" supplied by the California Highway Patrol (CHP). This operation shall be performed at off-peak hours, and requires coordination between Contractor and the CHP, with the cost being borne by Contractor.

G. Flaggers: When flagging is required, provide qualified flaggers and flagging in accordance with the requirements of the California MUTCD, Part 6.

H. Removal of Traffic Control Devices: All temporary signs, barricades, barrier curbs, crash cushions, drums, and cones used to safeguard traffic in connection with construction work shall be removed at the close of the workday, unless the state of the work is such that warning devices are still needed and are adapted for night closing.

I. Storage: No material or traffic control devices shall be stored on any lane intended for traffic use.

1.6 PORTABLE CHANGEABLE MESSAGE SIGN (CMS)

A. When conditions warrant, portable changeable message signs shall be furnished, placed, operated, and maintained at locations indicated or designated by the District's Engineer, in accordance with Section 12-3.01. "General," of the Caltrans Standard Specifications.

B. A CMS shall be placed at a location 800 to 1000 feet upstream from the beginning of temporary barriers alerting motorists of slow trucks ingressing or egressing the median.

C. The message shall read: "CAUTION - SLOW TRUCKS AHEAD," unless other words are required by the District's Engineer.

D. The CMS shall be in continuous operation during the hours when trucks are entering or leaving the median at a rate greater than two trucks per hour.

E. When two trucks or less per hour are leaving the median, the CMS shall be in operation only during the time when trucks are entering the traveled way. The CMS shall be turned off after the truck has safely entered the traveled way.

F. Each portable changeable message sign unit shall consist of a 3-line matrix sign panel, a controller unit, a power supply, and a structural support system all mounted on a trailer. The unit shall be assembled to form a complete self-contained portable changeable message sign that can be delivered to the site of the work and placed in immediate operation. The complete message sign unit shall be capable of operating in an ambient air temperature range of minus 20 degrees C to plus 70 degrees C and shall not be affected by mobile radio transmissions.

G. The trailer shall be equipped with at least 3 adjustable outrigger leveling pads near the frame corners to permit stable job site installations. The unit shall be capable of resisting overturning under wind loads of 60 mph with the sign in the fully elevated position. The overall width of the trailer unit, including the sign and mounting brackets, shall not exceed 102 inches while being towed.

H. The message displayed on the sign shall be visible from 1200 feet and shall be legible from a distance of 750 feet, at noon on a cloudless day, by persons with vision corrected to 20/20. The sign shall be capable of displaying a minimum of 8 characters per line on each of three lines.

I. The sign face shall be flat black and shall be protected from sun-glare by a method that does not interfere with the clarity of the sign message. The sign shall be raised and lowered by means of a power-driven lifting mechanism.

J. The matrix sign shall be capable of complete alphanumeric selection.

K. Lamp matrix type signs shall be equipped with an automatic dimming operational mode which automatically compensates for the influence of a temporary light source or other abnormal lighting conditions. The sign shall have manual dimming operation modes of three or more different lamp intensities.

L. Non-lamp matrix signs shall be internally illuminated at night.

M. The controller shall be an all-solid-state unit containing all the necessary circuitry for the storage of at least five pre-programmed messages. The controller shall be installed in a location allowing the operator to perform all functions from one position. A keyboard entry system shall be provided to allow an operator to generate an infinite number of additional messages over the preprogrammed five. The keyboard shall be equipped with a security lockout feature to prevent unauthorized use of the controller.

N. The controller shall contain a non-volatile memory to hold the keyboard created messages in memory during a non-power period. It shall allow for a variable message display rate that allows the operator to match the information display to the speed of the approaching motorists. The flashing off time shall be operator-adjustable within the control cabinet.

O. Full operation height shall be with the bottom of the sign at least 7 feet above the ground and the top no more than 14 feet, 6 inches above the ground.

P. The portable changeable message signs, when no longer required for the work, shall become the property of Contractor.

1.7 POLLUTION ABATEMENT - GENERAL REQUIREMENTS

A. Comply with General Conditions Article GC7.10. Conduct construction operations in a manner that will minimize pollution of the environment surrounding the area of the Work by all practicable means and methods. Apply specific controls as specified in the Contract Specifications and as follows:

1. Waste Materials: No waste or eroded materials shall be allowed to enter natural or man-made water or sewage removal systems. Eroded materials from excavations, borrow areas, or stockpiled fill shall be contained within the Work area. Contractor shall develop methods for control of erosion as specified in Article 1.08 herein.

2. Burning: No burning of waste materials or debris will be permitted.

3. Burying: No burying of waste materials and debris will be permitted within the limits of the District's property.

B. Provide for and maintain the flow of all sewers, drains, building or inlet connections, and all water courses which may be encountered during progress of the Work. Do not allow the contents of any sewer, drain, or building or inlet connection to flow into trenches. Immediately remove from proximity of the Work all offensive matter, using such precautions as are required by local authorities having jurisdiction.

1.8 EROSION AND SEDIMENT CONTROL

A. Contractor shall implement Sediment and Erosion control in accordance with the Program Requirements.

1.9 DUST CONTROL

A. Dust Control shall be in accordance with Marin County requirements, City of Novato requirements, Caltrans procedures, and in accordance with the commitments in the Environmental Impact Report. Best practices for dust control shall be used at all times.

1. Contractor shall take all steps necessary to ensure dust and debris do not leave the right of way, and that dust and debris are not deposited on adjacent properties or the NMP, including, but not limited to rocks and debris ejected during ballast distributing, ballast regulating, and rail welding operations.

2. At minimum, Contractor shall wet ballast prior to distributing and regulating and shall ensure skirts on ballast regulators are in good condition and are adjusted to fully contain material from brooming operations. Damage to adjoining properties or District property and any items thereon shall be repaired to the property owner's satisfaction at Contractor's sole expense.

1.10 NOISE CONTROL

A. Requirements: Minimize noise caused by construction operations, and provide working machinery and equipment fitted with efficient noise suppression devices. Employ other noise abatement measures as necessary for the protection of employees and the public. Comply with applicable ordinances, environmental conditions, or encroachment permit conditions as necessary for the work. In addition, restrict working hours and schedule operations in a manner that will minimize, to the greatest extent feasible, disturbance to residents in the vicinity of the Work. If required Contractor shall provide sound monitoring to verify compliance with sound levels listed below.

B. Definitions:

1. Daytime refers to the period from 7:00 a.m. to 7:00 p.m. local time daily except Sundays and legal holidays.

2. Nighttime refers to all other times including all day Sunday and legal holidays.

3. Construction Limits are defined for the purpose of these noise control requirements as the District right-of-way lines, construction easement boundaries, or property lines as described in the Contract Documents.

4. Zones, Special Zones, and Special Construction Sites outside of the Construction Limits shall be as designated by the local authority having jurisdiction. Such specially designated zones shall be treated by Contractor as if they were within the Construction Limits.

A. Monitoring:

1. Monitor noise levels of work operations to assure compliance with the noise limitations specified herein. Retain record of noise measurements for inspection by the Engineer.

2. Promptly inform the Engineer of any complaints received from the public regarding noise. Describe the action proposed and the schedule for implementation, and subsequently inform the Engineer of the results of the action.

3. Monitor noise levels day and night and for each new activity or piece of equipment. Start by measuring 3 times a day plus once a night for three consecutive days. Monitor noise levels at least once a week thereafter.

B. Measurement Procedure:

1. Except where otherwise indicated, perform all noise measurements using the A-weight network and "slow" response of an instrument complying with the criteria for a Type 2 General Purpose sound level meter as described in ANSI S 1.4.

2. Measure impulsive or impact noises with an impulse sound level meter complying with the criteria of IEC 179 for impulse sound level meters. As an alternative procedure, a Type 2 General Purpose sound level meter on C-weighting and "fast" response may be used to estimate peak values of

   impulsive or impact noises. Transient meter indications of 125 dbC "fast" or higher will be considered as indications of impulsive noise levels of 140 d or greater.

3. Measure noise levels at buildings affected acoustically by the Contractor's operations at points between 3 feet and 6 feet from the building face to minimize the effect of reflections.

4. Measure noise levels at points on the outer boundaries of Construction Limits or Special Construction Sites for noise emanating from within.

5. Where more than one criterion of noise limits is applicable, use the more restrictive requirement for determining compliance.

C. Continuous Construction Noise: Prevent noise from stationary sources, parked mobile sources, or any source or combination of sources producing repetitive or long-term noise lasting more than a few hours from exceeding the following limits:

1. Maximum Allowable Continuous Noise Level, dBA:

Affected Residential Area	Daytime	Nighttime
Single family residence areas	60	50
Along an arterial or in multi-family residential areas, including hospitals	65	55
In semi-residential/commercial areas, including hotels	70	60
Affected Commercial Area	At All Times	
In semi-residential/commercial areas, including schools	65	
In commercial areas with no nighttime residency	80	
Affected Industrial Area	At All Times	
All locations	70	

D. Intermittent Construction Noise: Prevent noises from non-stationary mobile equipment operated by a driver or from any source of non-scheduled, intermittent, non-repetitive, short- term noises not lasting more than a few hours from exceeding the following limits:

1. Maximum Allowable Intermittent Noise Level, dBA:

Affected Residential Area	Daytime	Nighttime
Single family residence areas	75	60
Along an arterial or in multi-family residential areas, including hospitals	75	65
In semi-residential/commercial areas, including hotels	80	70
Affected Commercial Area	At All Times	
In semi-residential/commercial areas, including schools	80	
In commercial areas with no nighttime residency	85	
Affected Industrial Area	At All Times	
All locations	90	

END OF SECTION 01 57 00

SECTION 01 58 00 PROJECT IDENTIFICATION

PART 1- GENERAL

1.1 SECTION INCLUDES

A. This section includes:

1. Project identification signs.

2. General construction signs.

1.2 MEASUREMENT AND PAYMENT

A. Separate measurement or payment will not be made for work required under this Section. All costs in connection with the work specified herein will be considered to be included with the related item of work in the Bid Schedule of the Bid Form, or incidental to the Work.

1.3 PROJECT IDENTIFICATION SIGNS

A. Requirements: Provide two (2) temporary, all-weather project identification signs not less than four (4) by eight (8) feet printed with full-color graphics. Sign details, verbiage and graphics will be provided by the District.

B. Location: Signs shall be located at each roadway crossing. Additional identical signs, as desired and paid for by Contractor, may be placed at intermediate points if first approved by the District's Engineer.

1.4 GENERAL CONSTRUCTION SIGNS

A. Requirements: Provide temporary general construction signs and field office identification signs as indicated or required. Provide field office identification signs for both the Engineer's field office and the Contractor's field office.

B. Design, Layout, and Size: Design, layout, style of lettering, and colors shall be as described in the Contract Documents.

1. General construction signs shall be constructed from a sheet of plywood 4 feet by 8 feet or 3 feet by 6 feet in size, as appropriate for the location, mounted on two posts set in the ground.

2. Field office signs shall be of similar design, 3 feet by 6 feet in size, for wall or post mounting, as appropriate for the location.

C. Location: Locate the signs as indicated or as designated by the Engineer.

Not used

1.5 CONSTRUCTION AND INSTALLATION

A. Materials: Sign faces shall be aluminum or sheet metal. Posts shall be 4-by-4 stock, either construction grade Douglas fir or A grade redwood, length as required for the location.

D. Construction: Plywood signs shall be let into the frame, and the frame corners shall be mitered and screwed together. The sign shall be screwed to two, 2-by-6 Douglas-fir cleats that shall be bolted to the posts with at least two 1/4-inch bolts per post.

B. Installation: Signposts shall be installed in the ground 3 feet deep, with the top of the sign horizontal, level, and even with the top of the posts, 7 feet minimum above the ground.

C. Painting: Signs shall receive one coat of primer sealer and two base coats of exterior semi-gloss enamel. Generally, letters and logos shall be painted in black and SMART green on a white background or include fellow agency logos in appropriate colors. Style of letters shall be Helvetica, unless otherwise indicated.

D. Maintenance: Keep signs clean and in good repair until Substantial Completion of the Contract.

E. Sign Quantities: Two (2) project signs are required.

PART 2 — PRODUCTS

Not Used

PART 3 - EXECUTION

3.1 CLOSEOUT

A. Upon completion of the Work, the signs shall be left in place or shall be removed and disposed of off the District's property, as determined by the District's Engineer.

END OF SECTION 01 58 00

SECTION 01 60 00 PRODUCT REQUIREMENTS

PART 1— GENERAL

1.1 SECTION INCLUDES

A. This section includes:

1. Quality of materials.
2. VOC regulations.
3. Appurtenances and accessories.
4. Packaging and handling.
5. Transportation and delivery.
6. Storage and protection.
7. Material safety data sheets.

1.2 MEASUREMENT AND PAYMENT

A. Separate measurement or payment will not be made for work required under this Section. All costs in connection with the work specified herein will be considered to be included with the related item of work in the Bid Schedule of the Bid Form, or incidental to the Work.

1.3 QUALITY OF MATERIALS

A. Materials, equipment, appliances, fixtures, and fabricated assemblies to be incorporated in the Work shall be new, except as may be indicated or specified otherwise in the Contract Documents.

B. Materials, equipment, assemblies, and systems shall be manufactured, fabricated, handled, and incorporated into the Work so as to ensure completed work meets the Contract requirements.

C. Additional quality assurance provisions for materials and equipment are specified in Section 01 43 00 - Quality Assurance.

D. Additional Requirements are included in General Conditions Article.

1.4 VOC REGULATIONS

A. Materials shall comply with the current, applicable regulations of the Environmental Protection Agency (EPA), California Air Resources Board (CARB), and the Bay Area Air Quality Management District governing permissible content of volatile organic compounds (VOC).

1.5 APPURTENANCES AND ACCESSORIES

A. Products to be incorporated in the Work shall be furnished as complete assemblies or systems with all appurtenances and installation anchors, fasteners, and accessories as required to provide a complete and finished product installation.

B. Installed products with moving parts shall be fully operable at proper settings and levels in accordance with the respective manufacturers' instructions and recommendations.

1.6 PACKAGING AND HANDLING

A. Avoid bending, scraping, or overstressing materials and equipment. Protect projecting parts by blocking with wood, by providing bracing, or by other approved methods.

B. Materials and equipment shall be protected from soiling and moisture by wrapping or by other approved methods.

C. Small parts shall be packaged in containers such as boxes, crates, or barrels to avoid dispersal and loss. Firmly secure an itemized list and description of contents to each such container.

1.7 TRANSPORTATION AND DELIVERY

A. Arrange deliveries of materials and equipment in accordance with the Detailed Project Schedule specified in Section 01 32 16 - Construction Progress Schedule and coordinate to avoid conflict with work and conditions at the site.

B. Deliver materials in undamaged condition, in manufacturers' original containers or packaging (where applicable), with identifying labels intact and legible.

C. Deliver cement, prepare dry mortar mixes, grouting material, plaster, and coloring material in original, unopened, and sealed containers, bearing the brand and manufacturer's name.

D. Refer also to the individual Specifications Sections for detailed requirements as applicable.

1.8 STORAGE AND PROTECTION

A. The receiving, storage, quality, and inventory control of equipment and materials required for the Work of this Contract shall be the sole responsibility of Contractor. Arrange storage to provide easy access for inspection and identification of each shipment.

B. Store materials in such a manner as to ensure the preservation of their quality and fitness for the work and to facilitate inspection.

C. Provide sheltered, weathertight, or heated weathertight storage as required to protect materials and equipment from weather damage and corrosion.

D. Store manufactured materials in accordance with the various manufacturers' instructions, with seals and labels intact and legible. Maintain temperature and humidity within the ranges required by the various manufacturers' instructions.

E. Provide blocking, platforms, pallets, or skids for materials and equipment subject to damage by contact with earth or pavement. Provide clearances from adjacent surfaces for stored materials requiring natural ventilation.

F. Store packaged materials in their original unbroken packages or containers.

G. Protect materials and equipment from damage and corrosion during warehousing operations.

H. Perform periodic inspections of stored materials to assure that materials are maintained under specified conditions and are free from damage or deterioration.

I. Continue protection of materials and equipment from damage and corrosion after installation until final acceptance of the Work.

J. Refer also to the individual Specifications Sections for detailed requirements, as applicable.

1.9 MATERIAL SAFETY DATA SHEETS (MSDS)

A. Contractor shall furnish MSDS for all materials to be incorporated in the Work. A file drawer or drawers shall be provided in Contractor's field office (or other acceptable location) for the filing of all MSDS. MSDS shall be filed in accordance with Specifications' Section numbers, and shall be readily available to the District's Engineer, jurisdictional inspection authorities, and all personnel engaged in the Work.

B. MSDS for material that are flammable or otherwise hazardous shall be posted on a bulletin board provided for this specific purpose. This bulletin board shall be located at the site, sheltered from rain and wind, and shall be readily accessible to all personnel engaged in the Work.

PART 2 — PRODUCTS

Not Used

PART 3 — EXECUTION

Not Used

END OF SECTION 01 60 00

SECTION 01 64 13 DISTRICT - FURNISHED MATERIALS EQUIPMENT

PART 1 - GENERAL

District shall provide the major timbers required for the work, as listed in the Scope of Work. Contractor shall verify quantities and dimensions and if any discrepancies from the plans are noted the discrepancies shall be brought to the attention of the District.

Contractor shall provide additional minor timbers as necessary to complete the work.

Owner supplied timbers meet SMART specifications for timber bridges.

PART 2 - PRODUCTS

Timbers have been received and accepted by the District prior to the work.

PART 3 - EXECUTION

Contractor shall be responsible for transporting timbers from the SMART Schellville Yard to the work location.

END OF SECTION 01 64 13

SECTION 01 71 13 MOBILIZATION

PART 1 - GENERAL

1.1 SECTION INCLUDES

A. This section includes:

1. Organization and mobilization of Contractor's forces.

2. Transporting construction plant and equipment to the jobsite and setting up of same.

3. Transporting various tools, materials, and equipment to the jobsite.

4. Erection of temporary buildings and facilities as required for field offices, staging, storage, and construction operations.

1.2 RELATED SECTIONS

A. Refer to Section 01 51 00 - Temporary Utilities, Section 01 52 00 - Construction Facilities, Section 01 57 00 - Temporary Controls, and Section 01 58 00 - Project Identification for specific requirements, as applicable.

1.3 MEASUREMENT AND PAYMENT

A. Measurement: Contractor shall place no more than 3% of construction cost (design not included) in Mobilization as part of Proposal and contract.

B. Payment: Mobilization will be paid for at the Contract lump sum price, and will include accumulating tools, apparatus, equipment, materials, and personnel, and performing final removal and demobilization. The Contract lump sum price will be paid as follows:

1. Contractor may invoice not more than 60% of total mobilization upon Contractor’s receipt of Notice to Proceed for construction.

2. Contractor may invoice for not less than 10% of total mobilization upon Contractor’s complete demobilization.

    1. Any remaining mobilization shall be paid in equal monthly installments based on the Contractor’s proposed schedule.

1.4 DESCRIPTION

A. Mobilization shall include mobilization of all construction equipment, materials, supplies, appurtenances, facilities, and the like, staffed and ready for commencing and prosecuting the Work; and the subsequent demobilization and removal from the jobsite of said equipment, appurtenances, facilities, and the like upon completion of the Work.

A. Mobilization shall also include assembly and delivery to the jobsite of plant, equipment, tools, materials, and supplies necessary for the prosecution of work which are not intended to be incorporated in the Work; the clearing of and preparation of Contractor's work area; the complete assembly, in working order, of equipment necessary to perform the required work; personnel services preparatory to commencing actual work; and all other preparatory work required to permit commencement of the actual work on construction items for which payment is provided under the Contract.

1.5 SUBMITTALS

A. Refer to Section 01 33 00 - Submittal Procedures, for submittal requirements and procedures.

B. If any differences between project plans and Contractor's site layout submit a plan of the proposed layout of the construction site, including fences, roads, parking, buildings, staging, and storage areas, and erosion control/pollution prevention measures within seven days after the effective date of the Notice to Proceed.

1.6 DELIVERY

A. Delivery to the jobsite of construction tools, equipment, plant, temporary buildings, materials, and supplies shall be accomplished in conformance with local governing ordinances and regulations.

1.7 TOOLS AND SUPPLIES

A. Provide construction tools, equipment, materials, and supplies of the types and quantities necessary to facilitate the timely execution of the Work.

B. Provide personnel, products, construction materials, equipment, tools, and supplies at the jobsite at the time they are scheduled to be installed or utilized.

1.8 PLANT LOCATION

A. Locate plant, or plants, appropriately close to the portion of the Work for which it will be used.

1.9 DEMOBILIZATION

A. Upon completion of the Work, remove construction tools, apparatus, equipment mobile units and buildings, unused materials and supplies, plant, and personnel from the jobsite.

B. Restore all areas utilized for mobilization to their original, natural state or, when called for in the Contract Documents, complete such areas indicated.

PART 2 — PRODUCTS

Not Used

PART 3 — EXECUTION

Not Used

END OF SECTION 01 71 13

SECTION 01 71 23 FIELD ENGINEERING

PART 1 - GENERAL

1.1 SECTION INCLUDES

A. This section includes:

1. Qualified services.
2. Lines and grades.
3. Survey of layout and performance.
4. Surveying accuracy and tolerances in setting survey stakes.

1.2 MEASUREMENT AND PAYMENT

A. Separate measurement or payment will not be made for work required under this Section. All costs in connection with the work specified herein will be considered to be included with the related item of work in the Bid Schedule of the Bid Form, or incidental to the Work.

1.3 REFERENCES

A. Caltrans Surveying Standards

1.4 SUBMITTALS

A. Refer to Section 01 33 00 - Submittal Procedures, for submittal requirements and procedures.

B. Survey notes, drawings, and calculations shall be completed as the work progresses and one copy of each survey document shall be submitted to the District for record purposes.

C. Construction survey notes shall be provided to the District's Engineer within 48 hours after completion of Contractor's survey.

D. Submit maps showing all final centerline, station, and other Contractor-installed monumentation, properly prepared and submitted to the District's Engineer for approval.

1.5 QUALIFIED SERVICES

A. Surveying services and field engineering services shall be performed under the direct supervision of a professional land surveyor or civil engineer currently licensed or registered in the State of California.

1.6 LINES AND GRADES

A. See PR 6 for survey control and datum information. The Contractor shall temporarily suspend work at such points and for such reasonable times as the District may require for resetting monuments, and the Contractor will not be entitled to any additional compensation or extension of time therefore.

A. All stakes or markers required to establish the lines and grades required for the completion of the Work shall be the responsibility of Contractor.

B. Any survey control, benchmarks of record, or boundary monuments disturbed or destroyed by Contractors work, which are shown in project plans, maps, and documents, shall be replaced by Contractor.

1.7 SURVEYS FOR LAYOUT AND PERFORMANCE

A. Surveying Requirements: Perform all surveys for layout and performance of the Work, reduce the field notes, and make all calculations and drawings necessary to carry out such work. Contractor shall check the relative positions of all monuments and benchmarks to be used and shall report any damaged or out-of- position monuments to the District's Engineer at once. Contractor shall check such relative positions each time Contractor uses such monument or benchmark.

B. Equipment and Personnel: Contractor's instruments and other survey equipment shall be accurate, suitable for the surveys required in accordance with recognized professional standards, and in proper condition and adjustment at all times. Perform all surveys under the direct supervision of a professional land surveyor currently licensed or registered in the State of California.

C. Field Notes and Records: Furnish the original pages of all survey records to the District's Engineer at intervals required by the District's Engineer. Furnish each field notebook to the District's Engineer when filled or completed.

D. Use by the District's Engineer: The District's Engineer may at any time use line and grade points and markers established by Contractor. Contractor's surveys are a part of the work and may be checked by the District's Engineer at any time. Contractor shall be responsible for any lines, grades, or measurements which do not comply with specified or proper tolerances, or which are otherwise defective, and for any resultant defects in the work. Contractor shall conduct resurveys or check surveys to correct errors indicated by review of the field notebooks or by check surveys performed by the District's Engineer.

1.8 SURVEYING ACCURACY AND TOLERANCES IN SETTING SURVEY STAKES

A. Surveying Accuracy: Control traverse field surveys and computations, including surveys of main control lines to determine horizontal and vertical alignment of major structure components, shall meet the accuracy requirements for Third Order as specified by Caltrans Surveying Standards. Staking for construction or equipment installations shall meet the accuracy requirements for Third Order as specified by Caltrans Surveying Standards.

B. Tolerances: The tolerances generally applicable in setting survey stakes shall be as set forth in Article 1.08.A above. Such tolerances shall not supersede stricter tolerances required by the Contract Drawings or Specifications and shall not otherwise relieve Contractor of responsibility for measurements in compliance therewith.

PART 2 — PRODUCTS

Not Used

PART 3 — EXECUTION

Not Used

END OF SECTION 01 71 23

SECTION 01 74 14 CLEANING

PART 1 - GENERAL

1.1 SECTION INCLUDES

A. This section includes:

1. Cleaning and cleanup during construction.
2. Dust control.
3. Disposal of debris.
4. Final cleaning of station facilities and ancillary buildings.
5. Final site cleanup.

1.2 RELATED SECTIONS

A. Refer to Section 01 57 00 - Temporary Controls, for basic mud control and dust abatement requirements.

1.3 MEASUREMENT AND PAYMENT

A. Separate measurement or payment will not be made for work required under this Section. All costs in connection with the work specified herein will be considered to be included with the related item of work in the Bid Schedule of the Bid Form, or incidental to the Work.

1.4 CLEANING AND CLEANUP DURING CONSTRUCTION

A. The entire site of the Work, including Contractor's work and storage areas, shall be kept in a neat, clean, and orderly condition at all times during the course of this Contract. The District's Engineer may, at any time during construction, order a general cleanup of the site as a part of the Work, and there shall be no additional cost to the District, therefore. Contractor shall provide general daily clean-up and disposal service for removal of waste, rubbish, trash, and debris away from the jobsite.

B. Perform cleaning of all facilities and ancillary buildings as required during construction to prevent accumulations of dust, dirt, soil, trash, and debris, so that a clean and safe working environment will be present at all times.

C. Walkways or designated pathways for authorized visitors shall be kept broom clean at all times. Walkways over exposed earth surfaces shall also be kept neat and free of pebbles and other obstacles to walking comfortably, equivalent to broom clean of paved surfaces.

D. Contractor shall remove all graffiti placed during the course of the Work within Contractor's enclosed secured areas at the work site. Contractor shall remove the graffiti within 24 hours after its detection in these areas.

1.5 DUST CONTROL

A. Dust control shall be in accordance with Contract SWPPP, project environmental conditions, or local agency encroachment permits.

1.6 DISPOSAL OF DEBRIS

A. Dispose of waste, trash, and debris in a safe, acceptable manner, in accordance with applicable laws and ordinances and as prescribed by authorities having jurisdiction. Bury no waste material and debris on the site. Burning of trash and debris on the site will not be permitted.

B. Location of disposal site for trash and debris and length of haul are Contractor's responsibility.

1.7 FINAL SITE CLEANUP

A. Prior to Final Inspection, thoroughly clean the entire site and put it into a clean and neat, acceptable condition. Remove from the site all construction waste and unused materials, dunnage, loose rock and stones, excess earth, and debris of any description resulting from the Work.

B. Hose down and scrub clean where necessary all pavement and paved walks.

C. Thoroughly remove mortar droppings from concrete slabs and pavement where they occur. Hose down and scrub clean all concrete flatwork and exposed vertical surfaces of concrete and masonry.

D. Free and clear all new and existing drainage systems.

E. Clean and protect all conduit openings.

F. Prior to Final Inspection, Contractor shall remove all markings from streets, sidewalks, walls and other District and City infrastructure within the enclosed secured area at the work sites.

PART 2 — PRODUCTS

Not Used

PART 3— EXECUTION

Not Used

END OF SECTION 01 74 14

SECTION 01 74 21 WASTE MANAGEMENT

PART 1- GENERAL

A. Waste management plan.

B. Separate measurement or payment will not be made for work required under this Section. All costs in connection with the worked specified herein will be considered to be included with the related items of work in the Bid Schedule of the Bid Form, or incidental to the Work.

1.2 DEFINITIONS

A. "Conversion Rate" means the rate set forth in the standardized Conversion Rate Table approved by the Engineer for use in estimating the weight of materials identified in the Waste Management Plan.

B. "Divert" means to use material for any purpose other than disposal in a landfill or transfer facility.

C. "Good faith" shall be as defined by law.

D. "Recycling Service" means an off-site service that provides processing of material and diversion from landfill.

E. "Hauler" means the entity that transports construction and demolition debris to either a landfill or a recycling service.

1.3 SYSTEM DESCRIPTION

A. Performance Requirements: The requirements for diversion of construction and demolition debris from landfill shall in no case be less than that required by local regulations. The minimum percentages for diversion of construction and demolition waste shall be as follows, unless modified in Contract Specifications Section 01 74 21- Waste Management, on the basis of a waste characterization study for the Work:

1. Divert a minimum of 70 percent of construction waste from landfill.
2. Divert a minimum of 100 percent of steel and concrete demolition waste from landfill and an overall minimum of 50 percent of remaining demolition waste from landfill.
3. Specific Requirements: Recycle magnetic ballasts and older fluorescent lamps containing polychlorinated biphenyls (PCBs) and other toxic chemicals in such a manner that potentially dangerous chemicals are

safely reprocessed.

1.4 SUBMITTALS

A. Submit specified Waste Management Plan using written and graphic representation to indicate how waste will be diverted from landfills.

B. Submit certification from recycling services that are not listed in directories acceptable to the Engineer. Examples of directories acceptable to the Engineer are listed under the Article entitled "Quality Assurance" herein.

C. Submit reports in accordance with approved Plan.

1.5 QUALITY ASSURANCE

A. Regulatory requirements

1. Comply with the requirements of the jurisdictional authority. In instances where the requirements specified herein are more stringent than those of specified herein, comply with specified requirements.
2. Obtain approval of the Waste Management Plan by the jurisdictional authority before beginning on-site mobilization if such approval is mandated by the jurisdictional authority.

1.6 WASTE MANAGEMENT PLAN

A. Plan Development: Develop a plan for diverting the specified percentage of construction debris from landfill. Include in plan either or both written and graphic information to indicate how waste will be diverted from landfills.

1. Submit and discuss the plan at or before the pre-construction meeting.
2. Propose means and methods for collecting and separating each type of debris deemed reusable or recyclable.
3. Identify the off-site recycling service and hauler of each designated debris item, who have agreed to accept and divert that item from landfill, in the proposed quantities anticipated. Schedule each item and list off-site recycling service and hauler company name, telephone number, address, and person contacted.
4. Include a "good faith" estimate of each type of construction waste that would be generated if no diversion methods were implemented. Submit with calculations based upon weight of each material. The following items are subject to the "good faith" estimate and diversion requirement:
    a. Asphalt concrete
    b. Portland cement concrete

c. Brick, clay products and ceramic tile

d. Aggregate

e. Clean earth fill

f. Metals

g. Wood products, including pallets

h. Plant and tree trimmings, may be included in wood products if so accepted by recycling service.

i. Gypsum board

j. Latex paint (not applicable to demolition work)

k. Plastic piping

l. Glass, excluding that used for containers

m. Insulations

n. Acoustical ceiling tiles, panels and boards

o. Resilient floorings

p. Carpets, and polyurethane foam pads (other types of pads may be included if accepted by recycling service)

q. Cardboard and paper products

r. Other, depending on anticipated waste.

5. Calculate quantities and convert volume measurements to weights in accordance with the defined Conversion Rate.

B. Plan Implementation:

1. Maintain log of each load, of each category item diverted from landfill. Log in separately debris sent to a Class III landfill and materials sent to recycling facilities.

a. Include in log, type of load, load weight, name of hauling service; recycling service or landfill, and date accepted by recycling service or by landfill.

b. The Engineer reserves the right to audit the log at any time, retain and make available, all weight tickets, copies of receipts and invoices.

c. Units of measure: Use same units as stated in the approved plan "good faith" estimate of construction waste that would be generated if no remedial methods were implemented.

2. Material handling

a. Separation facilities

1. Designate a specific on site area or areas to facilitate separation of materials for potential reuse, salvage, recycling, and return.

2. Keep waste bins and pile areas neat and clean. Clearly mark bins for each category of waste. Do not commingle non-recyclable waste with materials designated for reuse or recycling.

b. Environmental controls during handling, storage, or transport: Do not permit designated materials to become contaminated or to contaminate site or surrounding areas.

3. Training and coordination

a. Furnish copies of the Waste Management Plan to all on-site supervisors, each subcontractor, and the Engineer.

b. Instruction: Provide on-site instruction of appropriate separation, handling, and recycling, salvage, reuse, and return methods to be used by all entities at the appropriate stages of the Work.

c. Meetings: Include construction waste management on the agenda of meetings. At a minimum, discuss waste management goals and issues at the following meetings:

1) Pre-construction meeting.

2) Regularly scheduled job-site meetings.

C. Hazardous waste: Separate hazardous waste. Store and dispose of according to Contract requirements and local regulations.

PART 2 — PRODUCTS

Not Used

PART 3 — EXECUTION

Not Used

END OF SECTION 01 74 21

SECTION 01 77 00 CLOSEOUT PROCEDURES

PART 1— GENERAL

1.1 SECTION INCLUDES

A. This section includes:

1. Requirements preparatory to final inspection.

2. Final inspection.

3. Acceptance of the Work and final payment.

1.2 MEASUREMENT AND PAYMENT

A. Separate measurement or payment will not be made for work required under this Section. All costs in connection with the work specified herein will be considered to be included with the related item of work in the Bid Schedule of the Bid Form, or incidental to the Work.

1.3 REQUIREMENTS PREPARATORY TO FINAL INSPECTION

A. Contractor shall request a preliminary final inspection to determine the state of completion of the Work.

B. The request shall be made in writing, addressed to the District's Engineer, at least seven days in advance of the requested date of the preliminary inspection.

C. The District's Engineer will perform the preliminary inspection within three days of the requested date.

D. Prior to the requested date of the preliminary inspection, Contractor shall perform or provide the following, as applicable:

1. Temporary facilities, except as may be required for punch list work, shall be removed from the site.

2. The site and all applicable appurtenances and improvements shall be cleaned as specified in Section 01 74 14 - Cleaning.

3. Record drawings and specifications shall be completed, signed, and submitted to the District's Engineer as specified in Section 01 78 39 - Project Record Documents.

4. Guaranties and warranties shall be submitted to the District's Engineer, as specified in the General Conditions, along with required operations and maintenance manuals.

E. Contractor shall be represented by its Project Manager and such Subcontractors and Suppliers as may be necessary to answer the questions of the District's Engineer's inspection team.

F. Certain elements of the Work, such as mechanical and electrical work, may be scheduled separately at appointed times in order to keep the preliminary inspection more focused and the number of persons in the District's Engineer's inspection team to a minimum.

G. From the information gathered from this inspection, the District's Engineer will prepare a punch list of work to be performed, corrected, or completed.

H. All work on the punch list shall be completed by Contractor prior to requesting the final inspection.

1.4 FINAL INSPECTION

A. When all requirements of the above prepared punch list have been completed, Contractor shall request the final inspection to determine eligibility for issuance of the Notice of Acceptance in accordance with GC 9.8.

B. The request shall be made in writing, addressed to the District's Engineer, at least seven days in advance of the requested date of the final inspection.

C. Contractor shall be represented by its Project Manager and such Subcontractors and Suppliers as may be necessary to verify the completion of the Work including punch list items.

D. Depending on the extensiveness of the punch list items, certain elements of the Work may be scheduled separately for final inspection at appointed times.

E. The Work shall be substantially completed in accordance with the Contract Documents prior to requesting Notice of Acceptance

F. If the Work has not been substantially completed in accordance with the Contract Documents, and corrective measures are still required, a new punch list will be prepared by the District's Engineer, based on the information gathered from the final inspection, and Contractor will be required to complete this work and then call for another final inspection, following the procedure outlined above.

1.5 ACCEPTANCE OF THE WORK AND FINAL PAYMENT

A. Upon completion of the Substantial Completion punch list items, the District's Engineer will recommend that the District formally accept the Work.

B. Acceptance of the Work will be made in accordance with Article GC9.8 of the General Conditions. Final payment will be made in accordance with Article GC9.8 of the General Conditions.

PART 2 — PRODUCTS

Not Used

PART 3 — EXECUTION

Not Used

END OF SECTION 01 77 00

SECTION 01 78 23 OPERATION AND MAINTENANCE DATA

PART 1 – GENERAL

1.1 MEASUREMENT AND PAYMENT

A. Separate measurement or payment will not be made for work required under this Section. All costs in connection with the work specified herein will be considered to be included with the related item of work in the Bid Schedule of the Bid Form, or incidental to the Work.

PART 2 — PRODUCTS

2.1 OPERATION AND MAINTENANCE DATA FOR ALL PRODUCTS

A. Contractor shall provide Operation and Maintenance data, including but not limited to manufacturer's documentation, for all fabricated and purchased equipment, including systems equipment furnished under this Contract.

2.2 WARRANTY DATA

A. Contractor shall provide copies of all warranties.

B. All warranties shall be in favor of the District.

PART 3 — EXECUTION

Not Used

END OF SECTION 01 78 23

SECTION 01 78 39 PROJECT RECORD DOCUMENTS

PART 1— GENERAL

1.1 SECTION INCLUDES

A. This section includes:

1. Maintenance of Record Documents.
2. Drawings.
3. Specifications.
4. Submission of documents.

1.2 MEASUREMENT AND PAYMENT

A. Separate measurement or payment will not be made for work required under this Section. All costs in connection with the work specified herein will be considered to be included with the related item of work in the Bid Schedule of the Bid Form, or incidental to the Work.

1.3 MAINTENANCE OF RECORD DOCUMENTS

A. Maintain at the jobsite one copy of the following documents for record purposes:

1. Conformed Contract Documents. One set of full size 22 by 34-inch prints shall be maintained for recording "as-built" revisions and special features.
2. Change Orders.
3. Approved Submittals.
4. Clarifications or Explanatory Details and Specifications.
5. Inspection Reports.
6. Laboratory Test Records.
7. Field Test Reports and Records.
8. Factory Test Reports and Records.

B. Maintain for record purposes at a location approved by the District's Engineer, electronic files for those shop drawings and other documents which are required to be submitted electronically. Ensure that backups of electronic files are made on a regular basis and stored at a remote location.

C. Store documents used for record purposes in Contractor's field office or other approved location, apart from documents used for construction. Do not use record documents for construction or fabrication purposes.

D. Provide files and racks for storage of documents.

E. File documents in accordance with the filing format of the Contract Specifications, by Section number and title.

F. Maintain documents in clean, thy, legible condition.

G. Label each document "Project Record".

H. Make documents available at all times for inspection by the District's Engineer. Make copies of electronic documents available upon District's Engineer's request.

1.4 DRAWINGS

A. Record ("As-Built") Drawings:

1. Maintain record ("as-built") drawings of all work and subcontracts, continuously as the job progresses. A separate set of prints, for this purpose only, shall be kept at the Contractor's field office at all times.

2. These drawings shall be kept up-to-date and are required to be so certified by the Engineer at the time invoices are submitted for progress payments. The Engineer may withhold progress payments if record drawings are not kept current.

3. The Contractor shall use a complete set of full-size copies of the Approved IFC Drawings for the purpose of making prints for record ("as-built") drawings. The Contractor shall also transfer markups to the electronic files of the drawings for an electronic set of record drawings. The objects contained in CAD and Civil3D files shall retain all object properties, including but not limited to alignments, assemblies, corridors, etc.

4. Deviations from the drawings, utilities and services, mechanical and electrical lines, details, and other work shall be incorporated on the record ("as-built") prints in red ink, or in red pencil if sharp, neat, and clearly legible.

5. During the course of construction, identify actual locations to scale in red ink on the Approved IFC Drawings for runs of mechanical and electrical work, including utilities and services, installed in walls, or otherwise concealed. Deviations from the Drawings shall be shown in detail. Locate main runs, whether wiring, piping, conduit, ductwork, or drain lines by dimension and elevation. Shop Drawings may be used to reflect record ("as- built") conditions, in which case the appropriate Contract Document shall be marked to refer to such Shop Drawings as part of the record ("as- built") configuration.

6. No work shall be permanently concealed until the required information has been recorded.

7. Where the Approved IFC Drawings are not of sufficient size, scale, or detail, the Contractor shall supplemental drawings for incorporation of details and dimensions electronically and in hardcopy.

8. The final submittal of record ("as-built") drawings shall be stamped "Project Record ", signed and dated in blue ink by the Contractor, and shall be delivered to the Engineer prior to the final inspection as specified in Section 01 77 00, Closeout Procedures.

9. All project elements shall be captured in the As-Built drawings for the

   District, to the District's satisfaction.

B. Change Orders:

1. Changes to the Approved IFC Drawings as the result of Change Orders shall be incorporated on the prints, and these changes shall be identified by Change Order number and effective date and made to the electronic files to be used for the electronic copy of the record drawings.

   When revised IFC Drawings are issued as the basis of, or along with, Change Orders, these revised drawings shall be incorporated into the record ("as-built") set with appropriate annotation. Drawings deleted by Change Order will not be part of the record ("as-built") set.

C. Submittals:

1. One complete set of approved Submittals, including shop drawings, product data, manufacturers' printed catalog cuts and data, shall be collected and maintained for record purposes.

2. Pages of catalog cuts shall be clear, legible, and permanent. The drawings shall be on vellum or bond paper. Blueprints will not be acceptable. These drawings and catalog cuts shall become the property of the District.

3. Submittals shall be filed and maintained separate from Design Drawings and Shop Drawings. Documents shall be filed in 9 inch by 12 inch file folders to the greatest extent possible and shall be indexed as herein before specified.

4. Submittals shall be delivered in new paperboard boxes manufactured for the storage of file folders. Boxes shall have covers and cutout handles, and shall be accurately identified as to the contents. Include a packing list of all boxes and their contents.

D. Electronic Documents: Record ("as-built") information, as applicable, shall be recorded on an electronic copy of those documents which are required to be submitted electronically.

1. For those drawings which are required to be submitted electronically, submit one complete set of full size (22 by 34 inch, unless otherwise required) hard copy originals plotted on 20 lb. bond paper, zero solvent. The image shall be pressure-fused using a laser or LED plotter. Inkjet

   plotter is also acceptable. Sepia, blue or brown lines are not acceptable.

2. Record documents for each submittal which was required to be prepared and submitted electronically shall include two CD-ROMs of the electronic version. Electronic files shall include a matrix or document showing how the files are set up and how to access them. Include no extraneous files. Folder arrangement must be clear and understandable and subfolders are to be used only when necessary.

Not used

1.5 SPECIFICATIONS

E. Contract Specifications:

1. The specifications for record purposes shall be filed in one or more large- ring, 3-ring binder or binders.

2. Information, changes, and notes shall be recorded in the specifications in blank areas, such as page margins or the backs of opposite pages, or on separate sheets inserted in the binder. All such information, changes, and notes shall be legibly recorded with red pen or red printing as appropriate.

3. In applicable specification sections, record the manufacturer, trade name, catalog number, and supplier of each product and item of equipment actually furnished and installed, including manufacturer and supplier's address and telephone number.

4. The record specifications shall be complete and shall include all applicable Contract Documents other than drawings.

F. Change Orders:

1. Change Orders shall be incorporated into the front of the record specifications in reverse chronological order. Use appropriate page dividers to identify Change Orders and to separate Change Orders from

the Specifications.

2. In addition, changes to the Specifications effected by Change Order shall be legibly annotated on the affected page or pages of the Specifications or adjacent thereto.

1.2 SUBMISSION OF DOCUMENTS

A. At completion of the Work, and before requesting final inspection, deliver record documents to the Engineer.

B. For record ("as-built") drawings, submit the blackline print (full size) with revisions incorporated on the prints in red ink. For those documents which are required to be maintained electronically, submit full size plot of drawings, hard copies of 8 1/2 by 11 inch documents, and electronic files on CD-ROM.

C. Software: Software shall be in the same format that contract drawings were submitted in.

D. Record documents, separate from Contract Drawings and Shop Drawings, shall be delivered neatly and efficiently filed and packaged in appropriate file storage cabinets or boxes, 12 inches by 16 inches in size.

E. Submission of record documents shall be accompanied with a transmittal letter, in triplicate, containing the following information:

1. Date of submission.
2. Project title and number.
3. Contractor's name and address.
4. Title and number of each record document. (Shop Drawings may be grouped in basic categories or divisions of work and by box identification.)
5. Certification that each document as submitted is complete and accurate.
6. Signature of Contractor, or its authorized representative.

PART 2 — PRODUCTS

Not Used

PART 3 — EXECUTION

Not Used

END OF SECTION 01 78 39

SECTION 01 78 44 SPARE PARTS AND MAINTENANCE MATERIALS

PART 1— GENERAL

1.1 SECTION INCLUDES

1. Spare parts.
2. Maintenance materials.
3. Keys, special tools, and test equipment.
4. Keys for finish hardware are specified in Contract Specifications Section 08 71 00 - Door Hardware.

Not used

1.2 MEASUREMENT AND PAYMENT

1. Separate measurement or payment will not be made for work required under this Section. All costs in connection with the work specified herein will be considered to be included with the related item of work in the Bid Schedule of the Bid Form, or incidental to the Work.

1.3 SUBMITTALS

1. General: Refer to Section 01 33 00 - Submittal Procedures, for submittal requirements and procedures.
2. Spare Parts Lists:
   a. Prepare and submit a complete list of recommended spare parts for all equipment, appliances, and systems as specified in the various individual Sections of these Specifications, as applicable, and in the Contract Specifications.
   b. The Spare Parts List shall include all spare parts as required to provide for the maintenance and repairs of all Contractor-furnished equipment and appliances for a period of two years.
   c. The Spare Parts List shall be organized in accordance with the Contract Specifications, by Section number and title.
      (i) The Spare Parts List shall include the part's generic name or description, its trade

name, Contractor's part number, manufacturer's name, manufacturer's part number, retail price, quantity, and correlation with the pertinent Contract Documents, and Maintenance Manuals.

(ii) Spare parts shall be grouped by equipment category. Replacement parts common to more than one category shall be cross-referenced and indexed. Such common parts shall have only one part number.

3. Maintenance Materials List:

   a. Prepare and submit a complete list of maintenance materials as specified in the various individual Sections of these Specifications, and in the Contract Specifications.

   b. The Maintenance Materials List shall be organized in accordance with the Contract Specifications, by Section number and title. Include the quantities to be furnished.

   c. Where maintenance materials are specified as a percentage of the materials installed, such percentages shall be translated to actual quantities of materials in the Maintenance Materials List.

4. Keys, Special Tools, and Test Equipment List:

   a. Prepare and submit a complete list of the keys, special tools, and test equipment as specified in the various individual Sections of these Specifications, and in the Contract Specifications.

      The Keys, Special Tools, and Test Equipment List shall be organized in accordance with the Contract Specifications, by Section number and title.

5. Owner Requested Spare Parts:

   a. Provide submittals for Districts review for all owner requested spare parts described in this section.

PART 2 — PRODUCTS

2.1 SPARE PARTS

A. Requirements:

1. Provide specific spare parts as specified in the individual Sections of the Contract Specifications and as mentioned in Section 1.04.

2. Spare parts shall be identical to the parts installed in the Work.

B. Quantities: Provide quantities based on reliability requirements, replacement lead time, the Contractor's recommendations, and the following requirements:

1. Wear: Provide spare parts for components which may be expected to require regular replacement under normal maintenance schedules, such as mechanical parts subject to continuous operation.
2. Consumability: Provide spare parts for components with a life-expectancy of less than 5 years.
3. One-Time Limited Service: Provide spare parts that normally require replacement after performing their function one time, such as fuses.
4. Long Lead Time: Provide spare parts for components that are not readily available from distributors, such as for custom-fabricated components.
5. Exchange Assemblies: Provide assemblies which will be exchanged with malfunctioning units for installed equipment, and which must be inventoried as complete assemblies.

2.2 MAINTENANCE MATERIALS

A. Requirements:

1. Provide maintenance materials as specified in the individual Sections of the Contract Specifications.
2. Maintenance materials shall be identical to the materials installed in the Work.

B. Quantities: Provide quantities of materials as specified in the individual Sections of the Contract Specifications.

2.3 KEYS, SPECIAL TOOLS, AND TEST EQUIPMENT

A. Requirements: Provide sufficient keys, special tools and wrenches, and special test equipment and gages as required to access, start, maintain, and repair all the installed equipment, appliances, systems, and assemblies as specified in the individual Sections of the Contract Specifications.

B. Quantities: Provide quantities of keys, special tools, and test equipment as specified in the individual Sections of the Contract Specifications.

2.4 OWNER REQUESTED SPARE PARTS – NOT USED

PART 3 — EXECUTION

1.1 PACKAGING

A. Comply with applicable requirements of Section 01 60 00 - Product Requirements. All spare parts, maintenance materials, keys, special tools, and test equipment shall be securely packaged in boxes, with the boxes clearly labeled as to the contents. Such labeling shall include: location and description of the equipment and the item, complete listing of all items in the box, and the quantity of each item included in the box.

1.2 DELIVERY

A. Deliver spare parts, maintenance materials, keys, special tools, and test equipment, and Owner Requested Spare Parts to the warehouse location or locations specified in the Contract Specifications. Provide unloading service at the designated storage location for all delivered products.

B. Prepare formal receipts for all such delivered products, and have them signed by the authorized District Representative at the location. A copy of all such receipts shall be submitted to the Engineer for information and record.

1.3 STORAGE

A. Spare parts, maintenance materials, keys, special tools, and test equipment may be stored temporarily at the site of the work in suitable storage facilities until time to deliver these products to the locations designated in the Contract Specifications. Any such storage shall comply with the requirements specified in Section 01 60 00

END OF SECTION 01 78 44

SECTION 01 79 00 DEMONSTRATION AND TRAINING

PART 1— GENERAL

1.1 SECTION INCLUDES

A. This section includes:

1. Training sessions.

2. Training manuals and training aids.

1.2 MEASUREMENT AND PAYMENT

A. Separate measurement or payment will not be made for work required under this Section. All costs in connection with the work specified herein will be considered to be included with the related item of work in the Bid Schedule of the Bid Form, or incidental to the Work.

1.3 TRAINING SESSIONS

A. General:

1. Prior to final inspection and acceptance, instruct and train the District's designated operating and maintenance (O&M) personnel in the operation, start-up and shut-down, adjustment, troubleshooting, servicing, and preventive maintenance of all equipment and systems.

2. Explain to the District's O&M personnel, in full and to their complete understanding, all procedures necessary to operate and maintain all equipment and systems on a continuing basis.

3. Provide training manuals and other instructional materials and teaching aids as required to properly perform the required instruction and training.

4. Review the contents of all O&M Manuals with the District's O&M personnel in full detail to explain all aspects of the Manuals and the operation and maintenance of all equipment and systems.

5. Provide classroom and on-site instruction as most appropriate for the particular equipment or system or as specified more specifically in the individual specifications sections.

6. Provide the services of manufacturers' representatives for instruction and training when special equipment and systems require the knowledge and expertise of the various manufacturers for the proper operation and servicing of such equipment and systems.

7. Operation and maintenance manuals may be used for training manuals where appropriate.

8. Various specific and detailed requirements for instruction and training of SMART personnel are specified in the individual Sections of these Specifications, as applicable, and in the Contract Specifications.

B. Classroom Sessions:

1. Contractor shall provide not less than two (2) instruction and training sessions of sixteen (16) hours each in the operation and maintenance of all equipment and systems for SMART O&M personnel prior to acceptance by the District's Engineer of the affected work.

2. Training sessions shall be conducted by representatives of the various equipment and product manufacturers and the Subcontractors who are involved in the installation and acceptance testing of the affected equipment and systems. Training sessions shall enable a qualified service technician to troubleshoot and sustain the equipment and systems.

3. The District's Engineer will provide a classroom facility for such instruction and training sessions, located in a SMART facility in Petaluma, California. Approximately six (6) SMART maintenance persons will attend each training session.

4. Contractor shall schedule the training sessions through the District's Engineer at a time convenient to the District. Contractor shall notify the District's Engineer of the proposed training sessions at least 30 days before the dates the training will be held.

C. On-Site and Hands-on Sessions: Provide on-site, hands-on training sessions as required to demonstrate actual maintenance procedures on the equipment. Hands-on training shall provide SMART personnel with actual maintenance experience.

D. Videotaping Rights: The District's Engineer shall have the right to videotape any and all training sessions presented by Contractor. The District's Engineer shall also have the right to use these videotapes for future SMART-conducted training courses.

1.4 TRAINING MANUALS AND TRAINING AIDS

A. Contractor shall provide training manuals to supplement the O&M manuals and submit them to the District's Engineer for review and approval at least 60 days before the scheduled start of training sessions. Training manuals shall be prepared specifically for use as training aids.

B. Provide each training-session participant with one copy of pertinent training manuals and pertinent O&M manuals before the start of training sessions. Provide the District's Engineer with two additional training manuals for filing and reference documents.

C. Upon completion of each training session or course of instruction, instructor's

D. manuals, training manuals, training aids, special tools, and O&M manuals shall become the property of the District. Provide the District's Engineer with all revisions to the training manuals throughout the Contract and Guaranty periods.

E. The District reserves the right to copy all training manuals and training aids for use in District-conducted training courses.

F. Contractor shall provide all special tools, equipment, training aids, and other materials required for the training of SMART personnel. The number of special tools and other training equipment shall be adequate for the number of participants attending the training sessions.

PART 2 — PRODUCTS

Not Used

PART 3 — EXECUTION

Not Used

END OF SECTION 01 79 00

TO NOVATO

TO NAPA

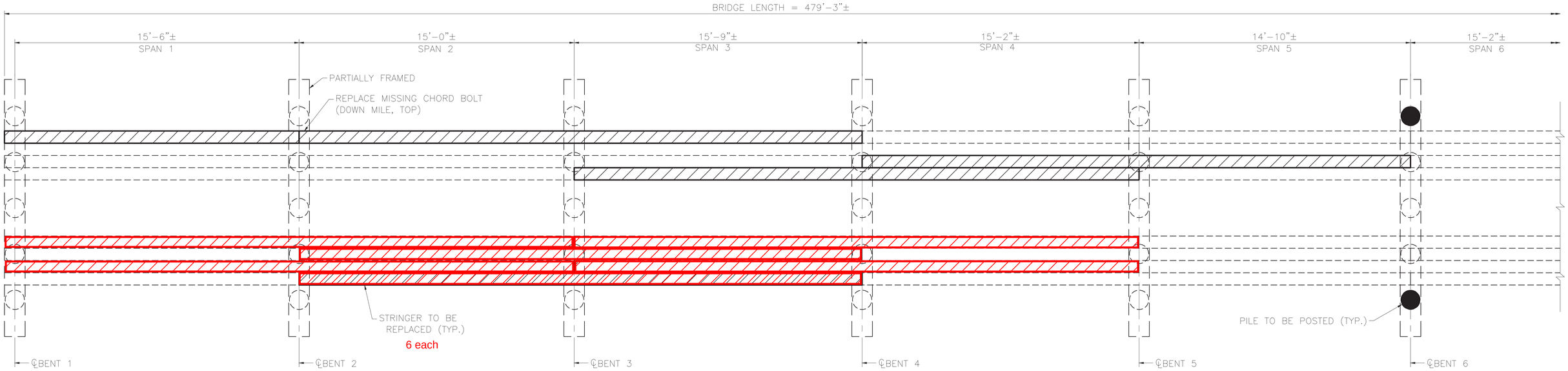

PLAN (STRINGERS & BENTS)
(SPANS 1–5)
⅜" = 1'-0"

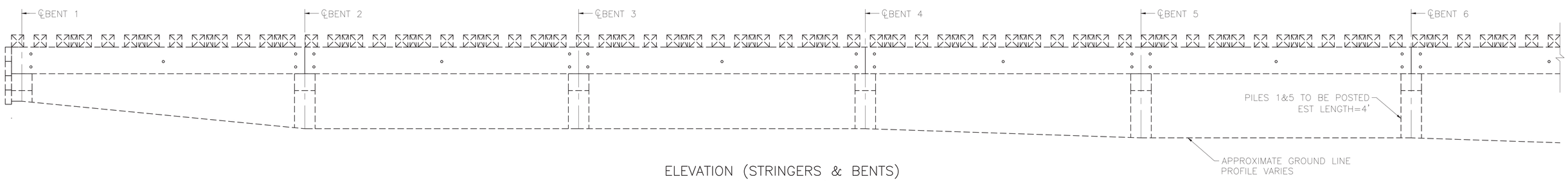

ELEVATION (STRINGERS & BENTS)
(SPANS 1–5)
⅜" = 1'-0"

BRIDGE LOCATION
LATITUDE: 38.086434°
LONGITUDE: −122.535166°

LEGEND

–TO BE REPLACED

–PILE TO BE POSTED

Updated December 2024 by SMART for stringer replacements per 2024 ARE bridge inspection report.

REGISTERED PROFESSIONAL ENGINEER
DAVID REX ANDERSON
C 45458
CIVIL ENGINEER
STATE OF CALIFORNIA
10-03-2022

ARE
300 E.39TH STREET,
KANSAS CITY, MO

REVISIONS			
NO.:	DESCRIPTION:	BY:	DATE:

SONOMA-MARIN SMART AREA RAIL TRANSIT

DRAWN BY:	DATE:	DESIGNED BY:	DATE:
JA	9/27/2022	MM	7/06/2022
APPROVED BY:	DATE:	SCALE:	DRAWING NO.:
DA	9/29/2022	AS SHOWN	1 OF 6

SONOMA–MARIN AREA RAIL TRANSIT
BRAZOS JUNCTION BRANCH
BRIDGE MP–26.26
STRINGERS AND BENTS

GENERAL NOTES

1. ALL REQUIREMENTS SHOWN ON THESE DRAWINGS SHALL BE ACCOMPLISHED AS SPECIFIED IN THE MOST CURRENT EDITION OF THE AMERICAN RAILWAY ENGINEERING AND MAINTENANCE-OF-WAY ASSOCIATION (AREMA) MANUAL FOR RAILWAY ENGINEERING.
   CHAPTER 7 TIMBER STRUCTURES
2. NEW CONSTRUCTION SHOWN IN HEAVY LINES. EXISTING STRUCTURE SHOWN IN LIGHT LINES.
3. CONTRACTOR IS RESPONSIBLE TO PROVIDE A SCHEDULE FOR THE COMPLETION OF THE WORK.
4. CONTRACTOR IS RESPONSIBLE FOR THE RESTORATION AND PROPER DISPOSAL OF MATERIALS TO BE REMOVED.
5. ALL WORK DONE. AND MATERIALS FURNISHED SHALL COMPLY WITH AREMA STANDARDS AND SPECIFICATIONS.
6. CONTRACTOR IS RESPONSIBLE FOR PROVIDING ALL ACCESSORIES AND OTHER MATERIAL NEEDED FOR THE INSTALLATION OF THE NEW MEMBERS SHOWN ON THESE DRAWINGS.
7. SMART IS RESPONSIBLE FOR PROVIDING NEW TIMBER MEMBERS SHOWN ON THE PLANS.
8. CONTRACTOR SHALL FIELD VERIFY ALL DIMENSIONS PRIOR TO CONSTRUCTION AND REPORT ANY DISCREPENCIES TO THE ENGINEER.

BILL OF MATERIAL

LINE	QUANT.	DESCRIPTION	SIZE	LENGTH	COMMENTS
	TO BE FURNISHED BY THE RAILROAD				
1	4	TIMBER CAP	14"x14"	20'-0"	CUT TO LENGTH
2	6	TIMBER STRINGER	17½"x8"	30'-0"	CUT TO LENGTH
3	36	TIMBER TIES	7½"x8"	9'-0"	
~~4~~	~~13~~	~~TIMBER OUTRIGGERS~~	~~4"x7¼"~~	~~18'-0"~~	
	TO BE FURNISHED BY THE CONTRACTOR				
1	18	DRIFT BOLTS	¾" DIA.	1'-10"	CAP - CAP CONNECTIONS & CAP - PILE CONNECTIONS
2	4	PACKING BOLTS - STRINGERS	¾" DIA.	43"	SPAN 1 LEFT STRINGER CHORD
3	8	PACKING BOLT WASHERS - STRINGERS	5/16"x3"O.D.	-	CUT WASHER OR EQUIVALENT
4	15	KEEPER ANGLES	∠4"x4"x½"	14"	CAP - STRINGER KEEPER ANGLES
5	15	BOLTS - KEEPER ANGLES	¾" DIA.	10"	
6	30	WASHERS - KEEPER ANGLES	5/16" x 3" O.D.	-	CUT WASHER OR EQUIVALENT
7	46	WASHER HEAD DRIVE SPIKES	11/16" DIA.	10"	THROUGH TIE SPACER

LIST OF DRAWINGS - MP34.22

DWG. NO.	TITLE
01	GENERAL NOTES
02	GENERAL PLAN & ELEVATION
03	DECK PLAN
04	TIMBER DETAILS

ARE
6405 METCALF AVE
SUITE 503
OVERLAND PARK, KS

ENGINEER STAMP
REGISTERED PROFESSIONAL ENGINEER
DAVID WES ANDERSON
C 45458
CIVIL ENGINEER
STATE OF CALIFORNIA
12/20/2024

REVISIONS			
NO.:	DESCRIPTION:	BY:	DATE:

SONOMA-MARIN SMART AREA RAIL TRANSIT

DRAWN BY: SF	VAL MAP NO.:	DATE: 1/13/2025	PLAN:	SONOMA-MARIN AREA RAIL TRANSIT
APPROVED BY: DA	DRAWING NAME:	SCALE: N.T.S.	DRAWING NO.: 1 OF 4	BRIDGE MP-34.22 GENERAL NOTES

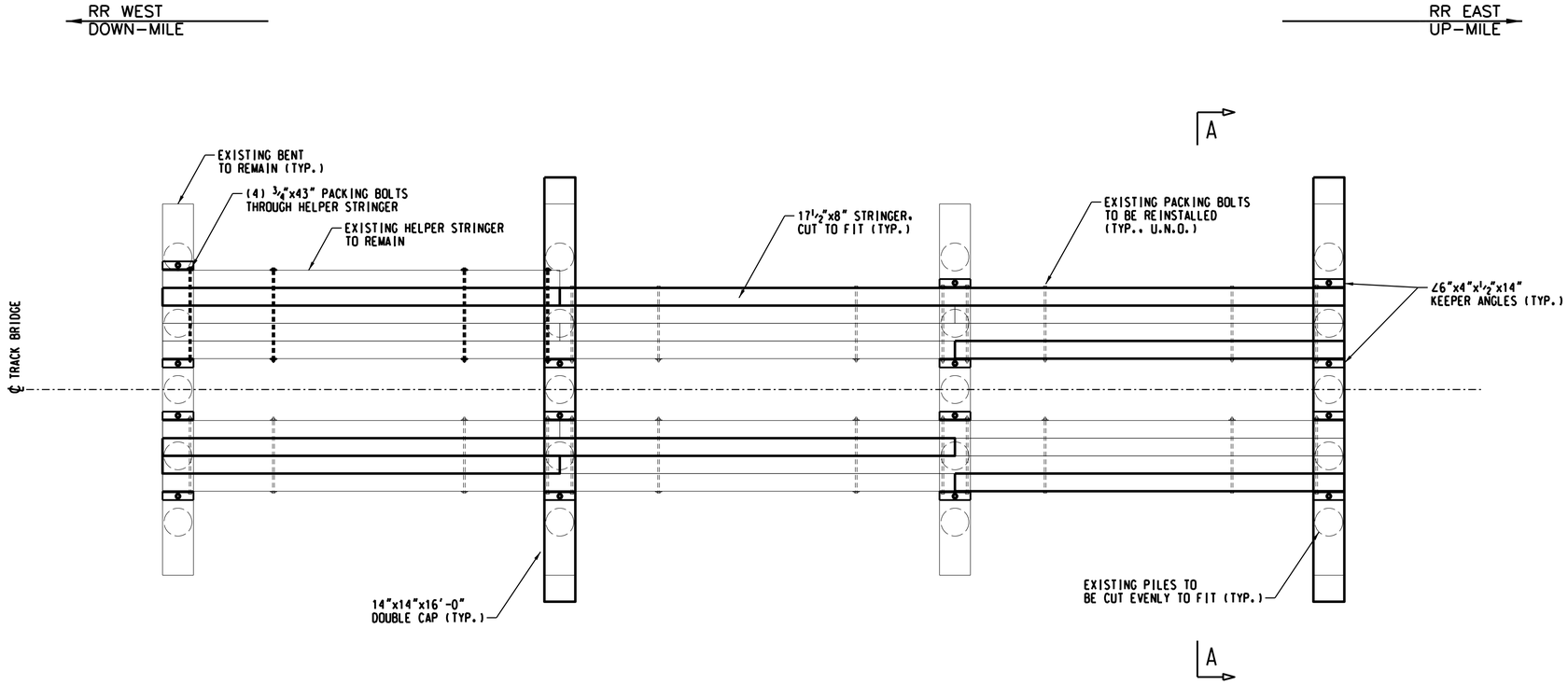

PLAN

BRIDGE DECK NOT SHOWN
FOR CLARIRTY

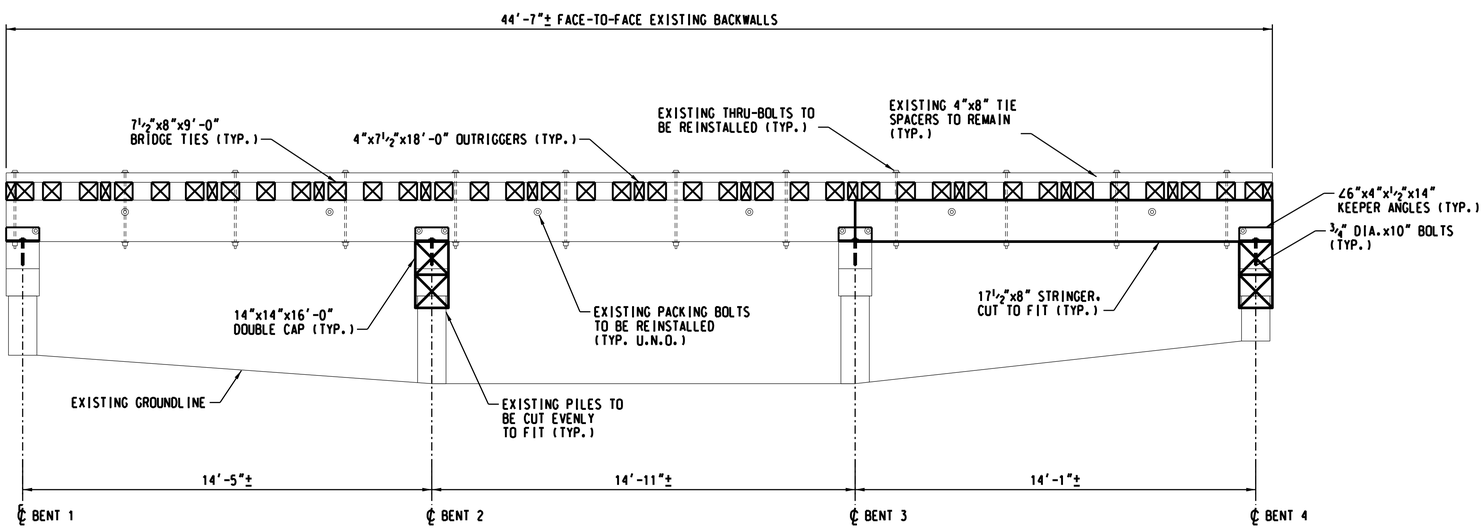

ELEVATION

TIMBER NOTES:

1. CONTRACTOR SHALL BE PROVIDED ALL DECK TIE, CAP, AND STRINGER MATERIAL PER PLAN.
2. CONTRACTOR SHALL PROVIDE ALL NECESSARY HARDWARE AND PROVIDE MATERIAL CERTIFICATIONS AND QUANTITY TO SMART FOR APPROVAL PRIOR TO START OF CONSTRUCTION.
3. EXISTING PILES SHALL BE CUT EVENLY AS NECESSARY FOR INSTALLATION OF NEW CAPS.
4. EXISTING TRACK LINE AND PROFILE SHALL BE MAINTAINED THROUGHOUT THE DURATION OF CONSTRUCTION AND SHALL BE APPROVED BY SMART UPON COMPLETION.
5. CONTRACTOR SHALL PROVIDE ALL SHIM MATERIAL FOR STRINGER CHORDS AND PILES AS NECESSARY. CONTRACTOR SHALL SUBMIT MATERIAL TO SMART FOR APPROVAL PRIOR TO USE.
6. EXISTING STRINGER HARDWARE SHALL BE REUSED. SPAN 1 HELPER STRINGER SHALL BE THRU-BOLTED TO CHORD USING NEW 3/4" DIAMETER PACKING BOLTS PROVIDED BY THE CONTRACTOR.

6405 METCALF AVE
SUITE 503
OVERLAND PARK, KS

ENGINEER STAMP

REVISIONS			
NO.:	DESCRIPTION:	BY:	DATE:

SONOMA-MARIN SMART AREA RAIL TRANSIT

DRAWN BY:	VAL MAP NO.:	DATE:	PLAN:
SF		1/13/2025	
APPROVED BY:	DRAWING NAME:	SCALE:	DRAWING NO.:
DA		N.T.S.	2 OF 4

SONOMA-MARIN AREA RAIL TRANSIT

BRIDGE MP-34.22

GENERAL PLAN & ELEVATION (1 OF 1)

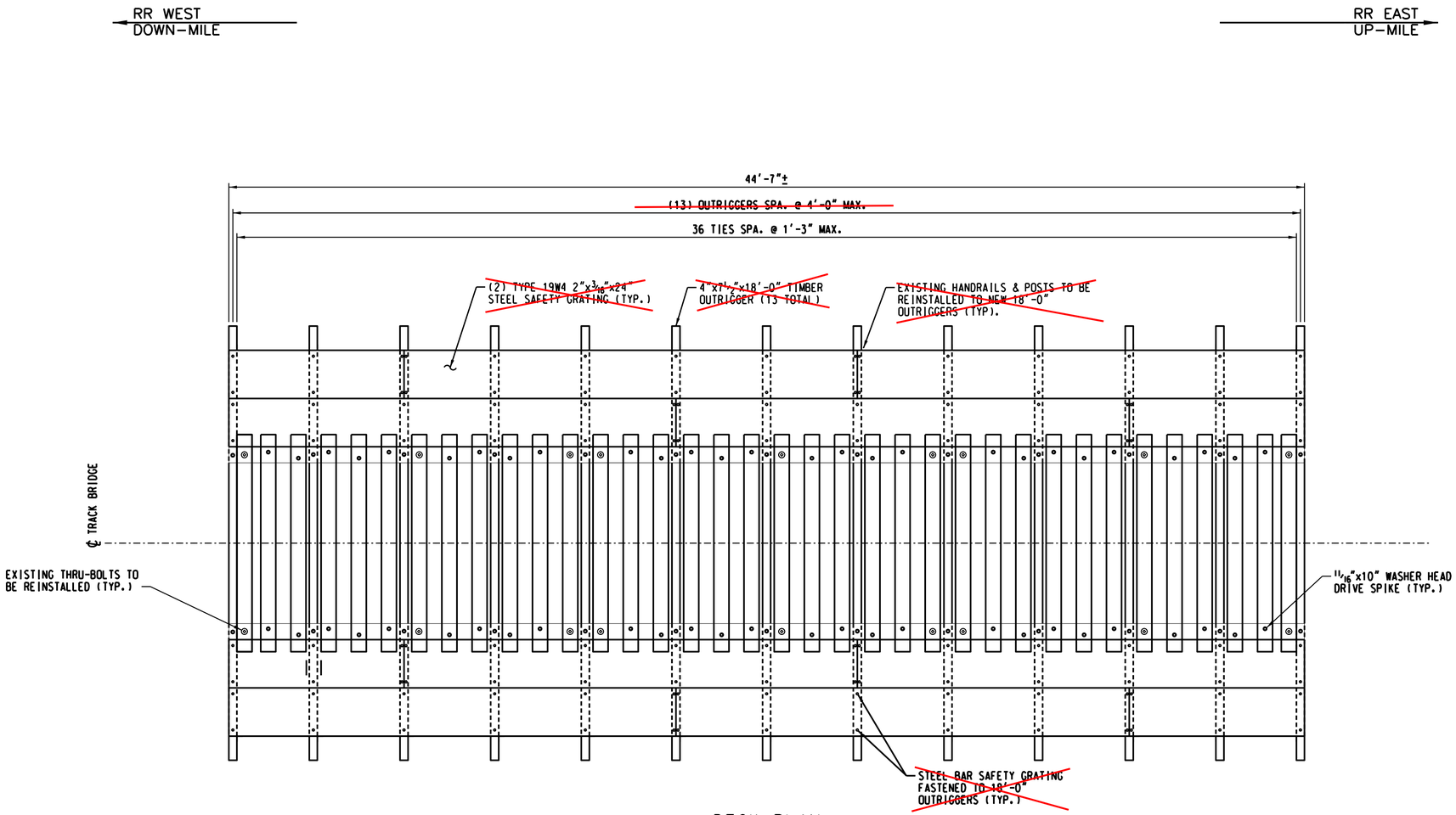

DECK PLAN

BILL OF MATERIALS				
ITEM	DIMENSIONS	LENGTH	QTY.	COMMENTS
TIMBER WALKWAY OUTRIGGER	4" x 7 1/2"	18'-0"	13 EA.	
SPIKE, WASHER HEAD, TIMBER DRIVE	3/4" DIA.	14"	26 EA.	FOR OUTRIGGERS
STEEL BAR SAFETY GRATING, TYPE 19W4 SERRATED	2"x3/16"x24"	20'-0"	5 EA.	FIELD CUT TO FIT
TIMBER LAG SCREW, HEX HEAD, ZINC-PLATED	3/8" DIA.	6"	120 EA.	WALKWAY PLANK FASTENER
ANCHOR DEVICE CLIP	-	-	120 EA.	

WALKWAY TO BE REMOVED AND NOT REPLACED.

HANDRAILS, POSTS, OUTRIGGERS, AND SAFETY GRATING WALKWAY REMOVED FROM SCOPE OF WORK.

APRIL, 2025

GENERAL NOTES:

1. CONTRACTOR SHALL VERIFY DIMENSIONS AND FIT UP OF NEW OUTRIGGERS. ANY DISCREPENCIES SHALL BE REPORTED TO THE ENGINEER.

FIELD NOTES:

1. STEEL BAR GRATING SHALL MEET NAAMM STANDARD MBG 531-17.STEEL BAR GRATING SHALL BE TYPE 19W4 SERRATED.
2. STEEL BAR SAFETY GRATING TO BE INSTALLED IN A STAGGERED PATTERN. NO ADJACENT SECTIONS MAY END ON THE SAME OUTRIGGER EXCEPT AT THE END OF SPANS. JOINTS BETWEEN ENDS OF STEEL BAR GRATING SHALL BE CENTERED ON OUTRIGGERS. STEEL BAR SAFETY GRATING SECTIONS SHALL SPAN A MINIMUM OF THREE SUPPORTS.
3. ALL STEEL BAR GRATING TO BE SAW CUT, NOT TORCHED. FIELD VERIFY LENGTHS PRIOR TO CUTTING. AFTER FIELD FABRICATION, PAINT UNFINISHED RAILING POSTS, WELDED AREAS, AND ABRASIONS ON GALVANIZED RAILING POSTS AND STEEL BAR GRATING WITH ONE COAT OF ORGANIC ZINC RICH PAINT. STEEL GRATING FASTENERS TO BE INSTALLED AS SHOWN.

TIMBER NOTES:

1 .TIES SHALL BE SPACED AT A MAXIMUM OF 15" ON CENTER, PER SMART DESIGN CRITERIA MANUAL.

2. CONTRACTOR SHALL REINSTALL ALL EXISTING TIE SPACERS, HANDRAIL POSTS AND, CABLE RAILING PER PLAN.
3. TIMBER WALKWAY OUTRIGGERS SHALL BE WEST COAST DOUGLAS FIR SELECT STRUCTURAL OR SOUTHERN PINE NO. 1 DENSE. TIMBER TO BE TO BE WELL SEASONED AND CONDITIONED. TIMBER TO BE PRESSURE TREATED, CUT TO EXACT LENGTH, SURFACED, AND HOLES BORED PRIOR TO TREATMENT. TIMBER SHALL BE IN ACCORDANCE WITH SMART DESIGN STANDARDS AND CHAPTER 7 OF THE CURRENT A.R.E.M.A. MANUAL FOR RAILWAY ENGINEERING.
4. TREATED TIMBER SHALL BE HANDLED CAREFULLY TO AVOID EXPOSING UNTREATED INTERIOR WOOD. CANT HOOKS, PEAVIES, PIKES OR HOOKS SHALL NOT BE USE. WHEREVER DAMAGE HAS OCCURRED TO THE TIMBER, FIELD TREATMENT SHALL BE USED.
5. HOLES FOR DRIVE SPIKES SHALL BE 1/8" LESS THAN DIAMETER OF THE SPIKE.

ARE
6405 METCALF AVE
SUITE 503
OVERLAND PARK, KS

ENGINEER STAMP

REVISIONS			
NO.:	DESCRIPTION:	BY:	DATE:

SONOMA-MARIN SMART AREA RAIL TRANSIT

DRAWN BY:	VAL MAP NO.:	DATE:	PLAN:
SF		1/13/2025	
APPROVED BY:	DRAWING NAME:	SCALE:	DRAWING NO.:
DA		N.T.S.	3 OF 4

SONOMA-MARIN AREA RAIL TRANSIT

BRIDGE MP-34.22

DECK PLAN

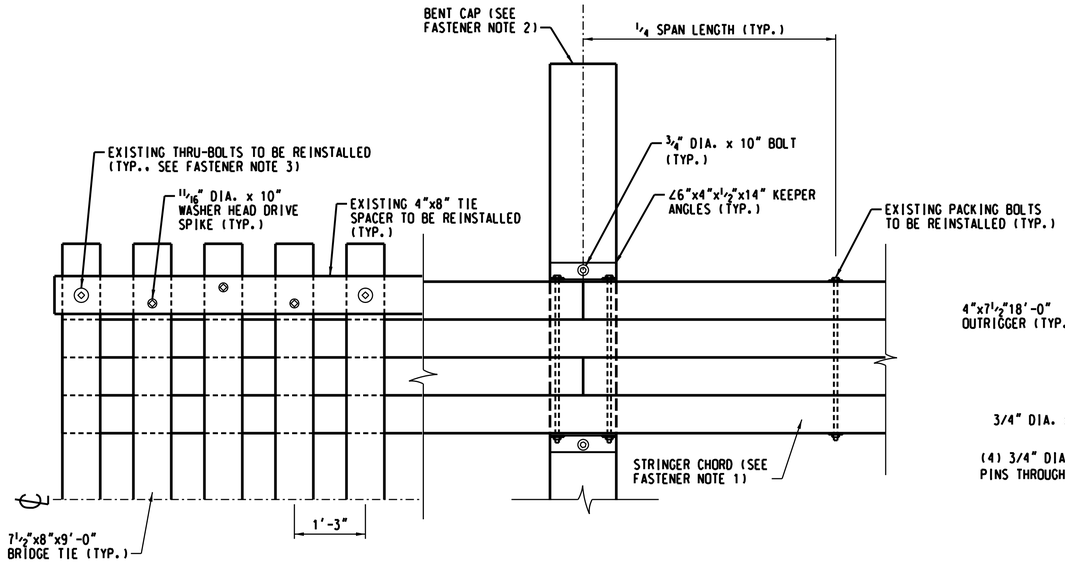

FASTENER DETAILS

WALKWAY NOT SHOWN FOR CLARITY

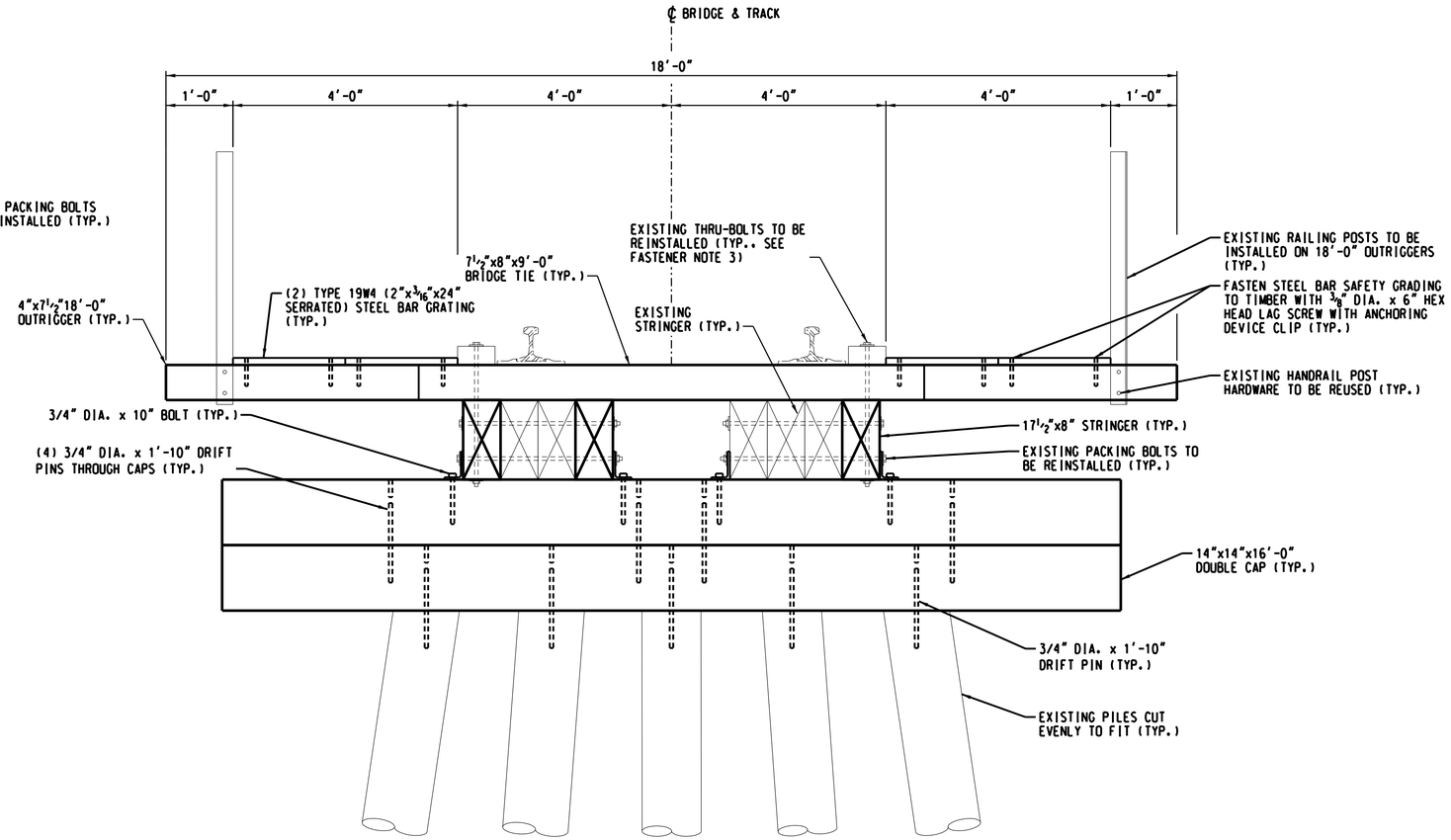

SECTION A-A

BACKWALL NOT SHOWN FOR CLARITY

FASTENER NOTES:

1. STRINGERS SHOWN FOR REFERENCE ONLY. SEE GENERAL PLAN AND ELEVATION SHEET FOR LOCATIONS OF STRINGER REPLACEMENTS.
2. BENT CAP SHOWN FOR REFERENCE ONLY. SEE GENERAL PLAN AND ELEVATION SHEET FOR LOCATIONS OF CAP REPLACEMENTS. SEE SECTION A-A, THIS SHEET, FOR CAP DETAILS.
3. EXISTING THRU-BOLTS SHALL BE REINSTALLED AT EACH END AND IN CENTER OF EACH TIE SPACER SECTION. 11/16" DIA x 10" WASHER HEAD DRIVE SPIKES SHALL BE INSTALLED THROUGH TIE SPACER IN ALL OTHER TIES.

FIELD NOTES:

1. FIELD DRILL HOLES THROUGH TIE SPACER INTO TIE FOR TIE SPACER ANCHORAGE TO TIE.
2. HOLES FOR BOLTS SHALL BE 1/16" LARGER THAN BOLT DIAMETER.
3. HOLES FOR SPIKES SHALL BE 1/8" SMALLER THAN SPIKE DIAMETER.
4. INSTALL 5/16" x 3" O.D. CUT WASHER OR EQUIVALENT FOR ALL THROUGH TIMBER BOLTS UNDER BOTH NUT AND HEAD. WHERE BOLT HEAD OR NUT IS BEARING ON TIMBER.
5. HOLES FOR 3/4" DIAMETER BOLTS SHALL BE 13/16" DIAMETER. HOLES FOR 3/4" DIAMETER DRIFT BOLTS SHALL BE 3/4" DIAMETER.

TIMBER NOTES:

1. TREATED TIMBER SHALL BE HANDLED CAREFULLY TO AVOID EXPOSING UNTREATED INTERIOR WOOD. CANT HOOKS, PEAVIES, PIKES OR HOOKS SHALL NOT BE USE. WHEREVER DAMAGE HAS OCCURRED TO THE TIMBER, FIELD TREATMENT SHALL BE USED. HOLES CUTS AND ABRASIONS MADE IN TREATED TIMBER SHALL BE SWABBED WITH PRESERVATIVE. BOLTS SHALL BE DIPPED IN PRESERVATIVE PRIOR TO SECURING.

ARE
6405 METCALF AVE
SUITE 503
OVERLAND PARK, KS

ENGINEER STAMP
REGISTERED PROFESSIONAL ENGINEER
DAVID REX ANDERSON
C 45458
CIVIL ENGINEERING
STATE OF CALIFORNIA
12-31-2025

REVISIONS			
NO.:	DESCRIPTION:	BY:	DATE:

SONOMA-MARIN AREA RAIL TRANSIT

DRAWN BY:	VAL MAP NO.:	DATE:	PLAN:
SF		1/13/2025	
APPROVED BY:	DRAWING NAME:	SCALE:	DRAWING NO.:
DA		N.T.S.	4 OF 4

SONOMA-MARIN AREA RAIL TRANSIT

BRIDGE MP-34.22

TIMBER DETAILS

GENERAL NOTES

1. ALL REQUIREMENTS SHOWN ON THESE DRAWINGS SHALL BE ACCOMPLISHED AS SPECIFIED IN THE MOST CURRENT EDITION OF THE AMERICAN RAILWAY ENGINEERING AND MAINTENANCE-OF-WAY ASSOCIATION (AREMA) MANUAL FOR RAILWAY ENGINEERING.
   CHAPTER 7 TIMBER STRUCTURES
2. PROPOSED CONSTRUCTION SHOWN IN HEAVY LINES. EXISTING STRUCTURE SHOWN IN LIGHT LINES.
3. CONTRACTOR IS RESPONSIBLE TO PROVIDE A SCHEDULE FOR THE COMPLETION OF THE WORK.
4. CONTRACTOR IS RESPONSIBLE FOR THE RESTORATION AND PROPER DISPOSAL OF MATERIALS TO BE REMOVED.
5. ALL WORK DONE, AND MATERIALS FURNISHED SHALL COMPLY WITH AREMA STANDARDS AND SPECIFICATIONS.
6. CONTRACTOR IS RESPONSIBLE FOR PROVIDING ALL ACCESSORIES AND OTHER MATERIAL NEEDED FOR THE INSTALLATION OF THE NEW MEMBERS SHOWN ON THESE DRAWINGS.
7. SMART IS RESPONSIBLE FOR PROVIDING NEW TIMBER MEMBERS SHOWN ON THE PLANS.
8. CONTRACTOR SHALL FIELD VERIFY ALL DIMENSIONS AND QUANTITIES PRIOR TO CONSTRUCTION AND REPORT ANY DISCREPENCIES TO THE ENGINEER.

BILL OF MATERIAL OPTION 1

LINE	QUANT.	DESCRIPTION	SIZE	LENGTH	REMARKS
	TO BE FURNISHED BY THE RAILROAD				
1	19	TIMBER CAPS, POSTS, AND SILLS	14"x14"	20'-0"	SECTION 1
2	2	TIMBER STRINGER	16½"x8"	30'-0"	SECTION 1
3	10	SWAY BRACING	4"x8"	24'-0"	SECTION 1
4	11	TIMBER CAPS, POSTS, AND SILLS	14"x14"	20'-0"	SECTION 3
5	6	SWAY BRACING	4"x8"	24'-0"	SECTION 3
	TO BE FURNISHED BY THE CONTRACTOR				
1	110	DRIFT PINS	¾" DIA.	1'-10"	CAP - POST & SILL - PILE STUB
2	110	DRIFT BOLTS	¾" DIA.	1'-2"	POST - SILL
3	23	PACKING BOLTS - STRINGERS	¾" DIA.	43"	SECTION 1 - (5) STRINGER CHORDS
4	74	PACKING BOLT WASHERS - STRINGERS	5/16"x3"O.D.	-	CUT WASHER OR EQUIVALENT
5	44	KEEPER ANGLES	∠4"X4"X1/2"	14"	CAP - STRINGER KEEPER ANGLES
6	30	PACKING BOLTS - KEEPER ANGLES	¾" DIA.	35"	ANGLE TO STRINGER (4) STRINGER CHORDS
7	39	BOLTS - KEEPER ANGLES	¾" DIA.	16"	ANGLE TO CAP
8	156	WASHERS - KEEPER ANGLES	5/16"x3"O.D.	-	CUT WASHER OR EQUIVALENT
9	99	BOLTS - BENT BRACING	1" DIA.	24"	TRANSVERSE BRACE CXN TO CAPS/POSTS
10	198	WASHERS - BENT BRACING	5/16"x3"O.D.	-	CUT WASHER OR EQUIVALENT
11	100	TIMBER LAG SCREW	⅜" DIA.	6"	OUTRIGGER SUPPORT TO CAP/(5) STRINGER KEEPER ANGLE TO CAP

BILL OF MATERIAL OPTION 2

LINE	QUANT.	DESCRIPTION	SIZE	LENGTH	REMARKS
	TO BE FURNISHED BY THE RAILROAD				
1	19	TIMBER CAPS, POSTS, AND SILLS	14"x14"	20'-0"	SECTION 1
2	32	TIMBER STRINGER	16½"x8"	30'-0"	SECTION 1
3	10	SWAY BRACING	4"x8"	24'-0"	SECTION 1
4	11	TIMBER CAPS, POSTS, AND SILLS	14"x14"	20'-0"	SECTION 3
5	20	TIMBER STRINGER	16½"x8"	30'-0"	SECTION 3
6	6	SWAY BRACING	4"x8"	24'-0"	SECTION 3
	TO BE FURNISHED BY THE CONTRACTOR				
1	110	DRIFT PINS	¾" DIA.	1'-10"	CAP - POST & SILL - PILE STUB
2	110	DRIFT BOLTS	¾" DIA.	1'-2"	POST - SILL
3	104	PACKING BOLTS - STRINGERS	¾" DIA.	35"	STRINGER CHORDS
4	208	PACKING BOLT WASHERS - STRINGERS	5/16"x3"O.D.	-	CUT WASHER OR EQUIVALENT
5	44	KEEPER ANGLES	∠4"X4"X1/2"	14"	CAP - STRINGER KEEPER ANGLES
6	44	BOLTS - KEEPER ANGLES	¾" DIA.	16"	ANGLE TO CAP
7	156	WASHERS - KEEPER ANGLES	5/16"x3"O.D.	-	CUT WASHER OR EQUIVALENT
8	99	BOLTS - BENT BRACING	1" DIA.	24"	TRANSVERSE BRACE CXN TO CAPS/POSTS
9	198	WASHERS - BENT BRACING	5/16"x3"O.D.	-	CUT WASHER OR EQUIVALENT
10	95	TIMBER LAG SCREW	⅜" DIA.	6"	OUTRIGGER SUPPORT TO CAP

LIST OF DRAWINGS - MP37.76

DWG. NO.	TITLE
01	GENERAL NOTES
02	GENERAL PLAN & ELEVATION S1 OPTION 1
03	GENERAL PLAN & ELEVATION S1 OPTION 2
04	GENERAL PLAN & ELEVATION S3 OPTION 1
05	GENERAL PLAN & ELEVATION S3 OPTION 2
06	TIMBER DETAILS

ARE
6405 METCALF AVE
SUITE 503
OVERLAND PARK, KS

ENGINEER STAMP
REGISTERED PROFESSIONAL ENGINEER
DAVID REX ANDERSON
C 45456
CIVIL ENGINEER
STATE OF CALIFORNIA
07/25/2025

REVISIONS

NO.:	DESCRIPTION:	BY:	DATE:

SONOMA-MARIN SMART AREA RAIL TRANSIT

DRAWN BY:	VAL MAP NO.:	DATE:	PLAN:
SF		1/15/2025	
APPROVED BY:	DRAWING NAME:	SCALE:	DRAWING NO.:
DA		N.T.S.	1 OF 6

SONOMA-MARIN AREA RAIL TRANSIT

BRIDGE MP-37.76
OVER SONOMA CREEK
GENERAL NOTES

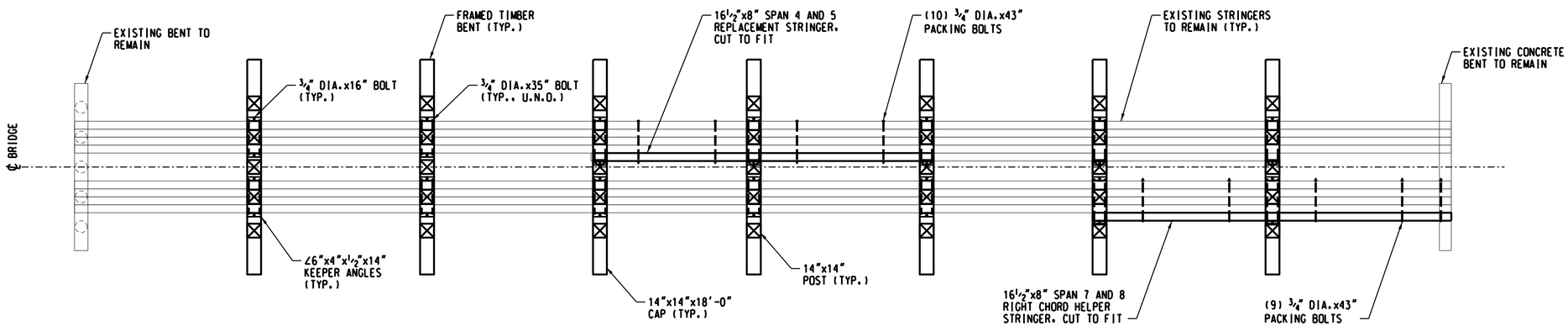

PLAN - OPTION 1

EXISTING BRIDGE DECK NOT SHOWN FOR CLARITY

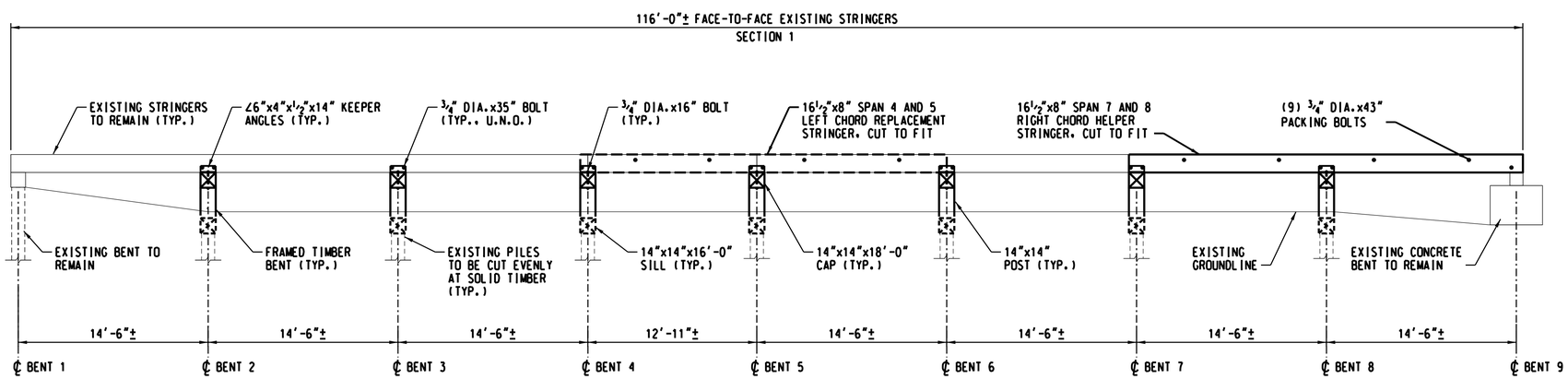

ELEVATION - OPTION 1

EXISTING BRIDGE DECK NOT SHOWN FOR CLARITY

CONSTRUCTION NOTES:

1. WORK SHALL BE COMPLETED PER SMART DESIGN CRITERIA AND AREMA STANDARDS.
2. CONTRACTOR SHALL BE PROVIDED ALL CAP, POST, BRACING, AND STRINGER MATERIAL AS SHOWN PER PLAN.
3. CONTRACTOR SHALL PROVIDE ALL NECESSARY HARDWARE AND PROVIDE MATERIAL CERTIFICATIONS AND QUANTITY TO SMART FOR APPROVAL PRIOR TO START OF CONSTRUCTION.
4. CONTRACTOR SHALL EXCAVATE A MINIMUM OF 2 FEET BELOW GROUNDLINE TO SOUND PILE, AND CUT EXISTING PILES LEVEL. CONTRACTOR SHALL FRAME BENTS ON EXISTING CUT PILES. CONTRACTOR SHALL BACKFILL COVERING TIMBER SILL.
5. EXISTING TRACK LINE AND PROFILE SHALL BE MAINTAINEDTHROUGHOUT DURATION OF CONSTRUCTION AND APPROVED BY SMART UPON COMPLETION.
6. CONTRACTOR SHALL PROVIDE ALL SHIM MATERIAL FOR STRINGER CHORDS AND PILES AS NECESSARY. CONTRACTOR SHALL SUBMIT MATERIAL TO SMART FOR APPROVAL PRIOR TO START OF CONSTRUCTION.
7. SPAN 7 AND SPAN 8 HELPER STRINGERS SHALL BE THRU-BOLTED TO CHORD USING NEW ¾" PACKING BOLTS PROVIDED BY THE CONTRACTOR.
8. SPAN 4 AND 5 STRINGER 5 REPLACEMENT TO BE THRU-BOLTED TO CHORD USING NEW ¾" PACKING BOLTS PROVIDED BY THE CONTRACTOR.
9. CUTTING OF RAIL IS NOT PERMITTED WITHOUT SMART'S APPROVAL.

ARE
6405 METCALF AVE
SUITE 503
OVERLAND PARK, KS

ENGINEER STAMP
REGISTERED PROFESSIONAL ENGINEER
DAVID REK ANDERSON
C 45458
CIVIL ENGINEER
STATE OF CALIFORNIA
01/15/2025

REVISIONS			
NO.:	DESCRIPTION:	BY:	DATE:

SONOMA-MARIN AREA RAIL TRANSIT

DRAWN BY:	VAL MAP NO.:	DATE:	PLAN:
SF		1/15/2025	
APPROVED BY:	DRAWING NAME:	SCALE:	DRAWING NO.:
DA		N.T.S.	2 OF 6

SONOMA-MARIN AREA RAIL TRANSIT

BRIDGE MP-37.76
OVER SONOMA CREEK
GENERAL PLAN & ELEVATION - S1
OPTION 1

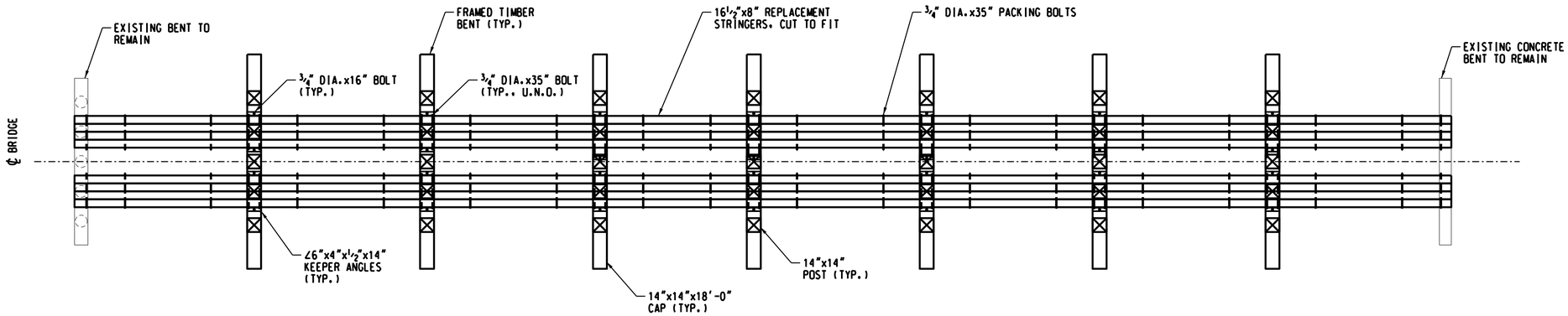

PLAN - OPTION 2

EXISTING BRIDGE DECK NOT SHOWN FOR CLARITY

CONSTRUCTION NOTES:

1. WORK SHALL BE COMPLETED PER SMART DESIGN CRITERIA AND AREMA STANDARDS.
2. CONTRACTOR SHALL BE PROVIDED ALL CAP, POST, BRACING, AND STRINGER MATERIAL AS SHOWN PER PLAN.
3. CONTRACTOR SHALL PROVIDE ALL NECESSARY HARDWARE AND PROVIDE MATERIAL CERTIFICATIONS AND QUANTITY TO SMART FOR APPROVAL PRIOR TO START OF CONSTRUCTION.
4. CONTRACTOR SHALL EXCAVATE A MINIMUM OF 2 FEET BELOW GROUNDLINE TO SOUND PILE, AND CUT EXISTING PILES LEVEL. CONTRACTOR SHALL FRAME BENTS ON EXISTING CUT PILES. CONTRACTOR SHALL BACKFILL COVERING TIMBER SILL.
5. EXISTING TRACK LINE AND PROFILE SHALL BE MAINTAINEDTHROUGHOUT DURATION OF CONSTRUCTION AND APPROVED BY SMART UPON COMPLETION.
6. CONTRACTOR SHALL PROVIDE ALL SHIM MATERIAL FOR STRINGER CHORDS AND PILES AS NECESSARY. CONTRACTOR SHALL SUBMIT MATERIAL TO SMART FOR APPROVAL PRIOR TO START OF CONSTRUCTION.
7. STRINGERS SHALL BE THRU-BOLTED TO CHORDS USING NEW ¾" PACKING BOLTS PROVIDED BY THE CONTRACTOR.
8. CUTTING OF RAIL IS NOT PERMITTED WITHOUT SMART'S APPROVAL.

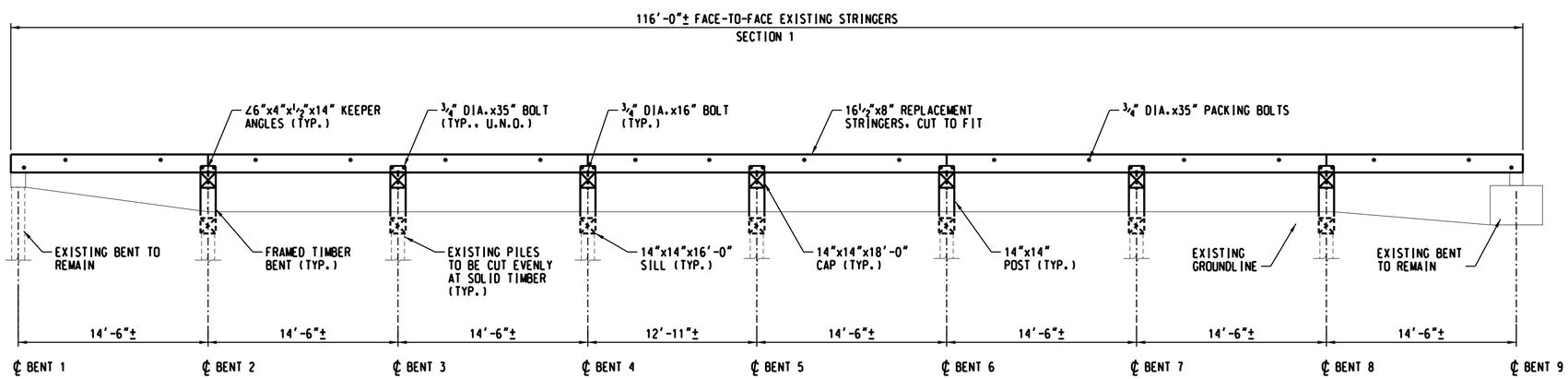

ELEVATION - OPTION 2

EXISTING BRIDGE DECK NOT SHOWN FOR CLARITY

ARE
6405 METCALF AVE
SUITE 503
OVERLAND PARK, KS

ENGINEER STAMP
REGISTERED PROFESSIONAL ENGINEER
DAVID REX ANDERSON
C 45458
CIVIL ENGINEER
STATE OF CALIFORNIA
01/15/2025

REVISIONS			
NO.:	DESCRIPTION:	BY:	DATE:

SONOMA-MARIN AREA RAIL TRANSIT

DRAWN BY:	VAL MAP NO.:	DATE:	PLAN:
SF		1/15/2025	
APPROVED BY:	DRAWING NAME:	SCALE:	DRAWING NO.:
DA		N.T.S.	3 OF 6

SONOMA-MARIN AREA RAIL TRANSIT

BRIDGE MP-37.76
OVER SONOMA CREEK
GENERAL PLAN & ELEVATION - S1
OPTION 2

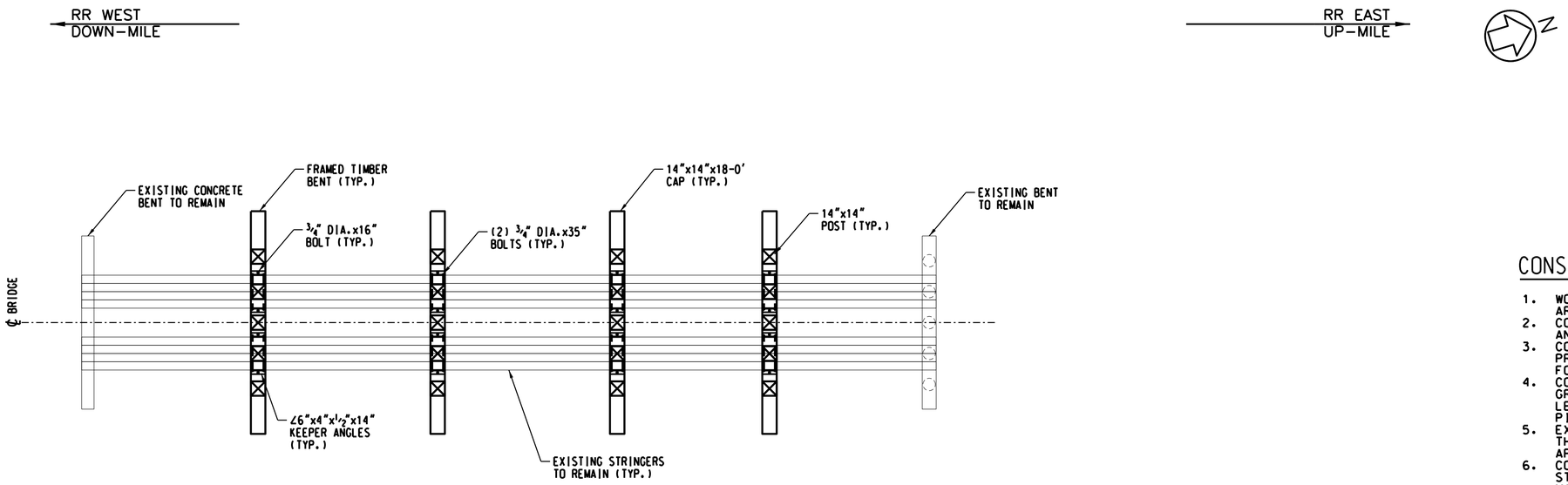

PLAN - OPTION 1

EXISTING BRIDGE DECK NOT SHOWN FOR CLARITY

CONSTRUCTION NOTES:

1. WORK SHALL BE COMPLETED PER SMART DESIGN CRITERIA AND AREMA STANDARDS.
2. CONTRACTOR SHALL BE PROVIDED ALL CAP, POST, BRACING, AND STRINGER MATERIAL PER PLAN.
3. CONTRACTOR SHALL PROVIDE ALL NECESSARY HARDWARE AND PROVIDE MATERIAL CERTIFICATIONS AND QUANTITY TO SMART FOR APPROVAL PRIOR TO START OF CONSTRUCTION.
4. CONTRACTOR SHALL EXCAVATE A MINIMUM OF 2 FEET BELOW GROUNDLINE TO SOUND PILE, AND CUT EXISTING PILES LEVEL. CONTRACTOR SHALL FRAME BENTS ON EXISTING CUT PILES. CONTRACTOR SHALL BACKFILL COVERING TIMBER SILL.
5. EXISTING TRACK LINE AND PROFILE SHALL BE MAINTAINED THROUGHOUT DURATION OF CONSTRUCTION AND SHALL BE APPROVED BY SMART UPON COMPLETION.
6. CONTRACTOR SHALL PROVIDE ALL SHIM MATERIAL FOR STRINGER CHORDS AND PILES. CONTRACTOR SHALL SUBMIT MATERIAL TO SMART FOR APPROVAL PRIOR TO START OF CONSTRUCTION.
7. CUTTING OF RAIL IS NOT PERMITTED WITHOUT SMART'S APPROVAL.

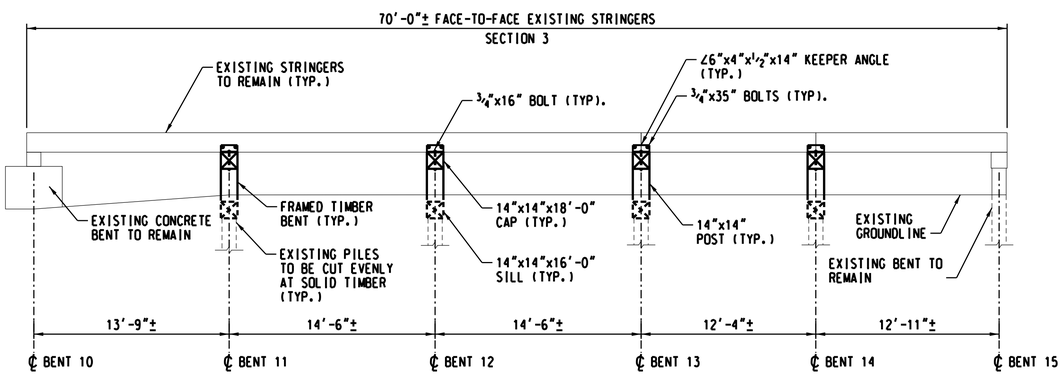

ELEVATION - OPTION 1

EXISTING BRIDGE DECK NOT SHOWN FOR CLARITY

ARE
6405 METCALF AVE
SUITE 503
OVERLAND PARK, KS

ENGINEER STAMP
REGISTERED PROFESSIONAL ENGINEER
DAVID REN ANDERSON
C 45458
CIVIL ENGINEER
STATE OF CALIFORNIA
01/15/2025

REVISIONS

NO.:	DESCRIPTION:	BY:	DATE:

SONOMA-MARIN AREA RAIL TRANSIT

DRAWN BY:	VAL MAP NO.:	DATE:	PLAN:
SF		1/15/2025	
APPROVED BY:	DRAWING NAME:	SCALE:	DRAWING NO.:
DA		N.T.S.	4 OF 6

BRIDGE MP-37.76
OVER SONOMA CREEK
GENERAL PLAN & ELEVATION - S3
OPTION 1

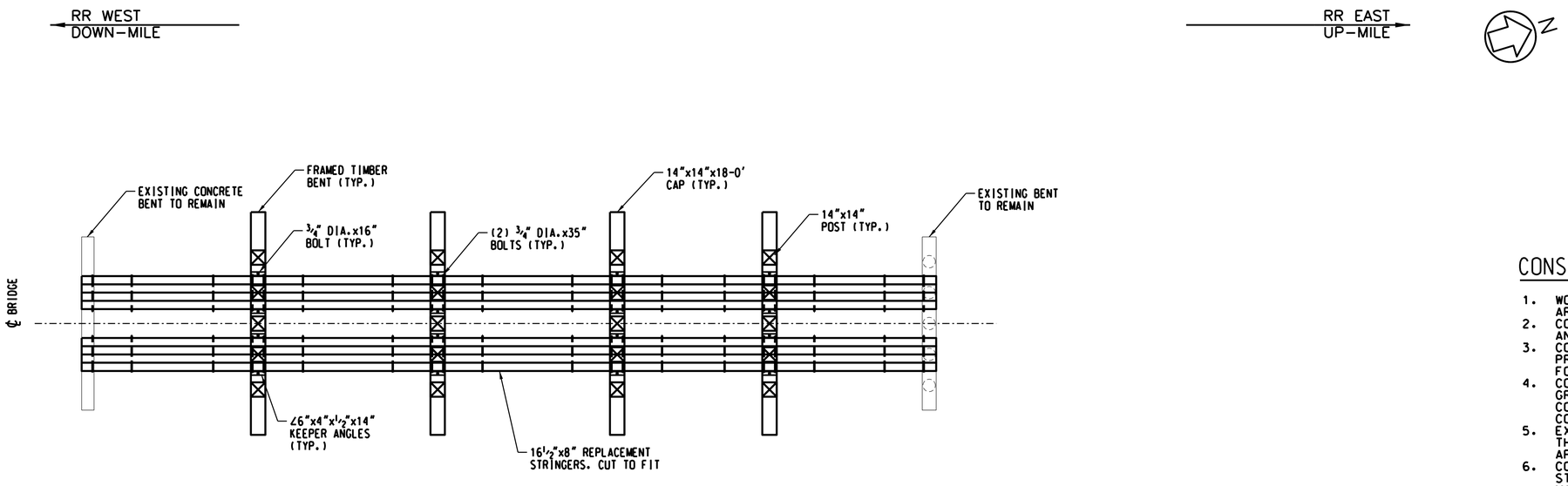

PLAN - OPTION 2

EXISTING BRIDGE DECK NOT SHOWN FOR CLARITY

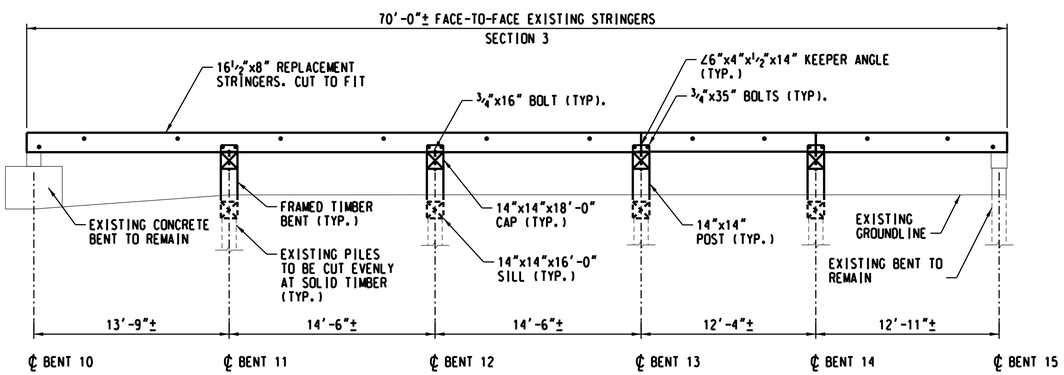

ELEVATION - OPTION 2

EXISTING BRIDGE DECK NOT SHOWN FOR CLARITY

CONSTRUCTION NOTES:

1. WORK SHALL BE COMPLETED PER SMART DESIGN CRITERIA AND AREMA STANDARDS.
2. CONTRACTOR SHALL BE PROVIDED ALL CAP, POST, BRACING, AND STRINGER MATERIAL PER PLAN.
3. CONTRACTOR SHALL PROVIDE ALL NECESSARY HARDWARE AND PROVIDE MATERIAL CERTIFICATIONS AND QUANTITY TO SMART FOR APPROVAL PRIOR TO START OF CONSTRUCTION.
4. CONTRACTOR SHALL EXCAVATE A MINIMUM OF 2 FEET BELOW GROUNDLINE TO SOUND PILE, AND CUT EXISTING PILES LEVEL. CONTRACTOR SHALL FRAME BENTS ON EXISTING CUT PILES. CONTRACTOR SHALL BACKFILL COVERING TIMBER SILL.
5. EXISTING TRACK LINE AND PROFILE SHALL BE MAINTAINED THROUGHOUT DURATION OF CONSTRUCTION AND SHALL BE APPROVED BY SMART UPON COMPLETION.
6. CONTRACTOR SHALL PROVIDE ALL SHIM MATERIAL FOR STRINGER CHORDS AND PILES. CONTRACTOR SHALL SUBMIT MATERIAL TO SMART FOR APPROVAL PRIOR TO START OF CONSTRUCTION.
7. CUTTING OF RAIL IS NOT PERMITTED WITHOUT SMART'S APPROVAL.

6405 METCALF AVE
SUITE 503
OVERLAND PARK, KS

ENGINEER STAMP

REVISIONS			
NO.:	DESCRIPTION:	BY:	DATE:

SONOMA-MARIN SMART AREA RAIL TRANSIT

DRAWN BY:	VAL MAP NO.:	DATE:	PLAN:
SF		1/15/2025	
APPROVED BY:	DRAWING NAME:	SCALE:	DRAWING NO.:
DA		N.T.S.	5 OF 6

SONOMA-MARIN AREA RAIL TRANSIT

BRIDGE MP-37.76
OVER SONOMA CREEK
GENERAL PLAN & ELEVATION - S3
OPTION 2

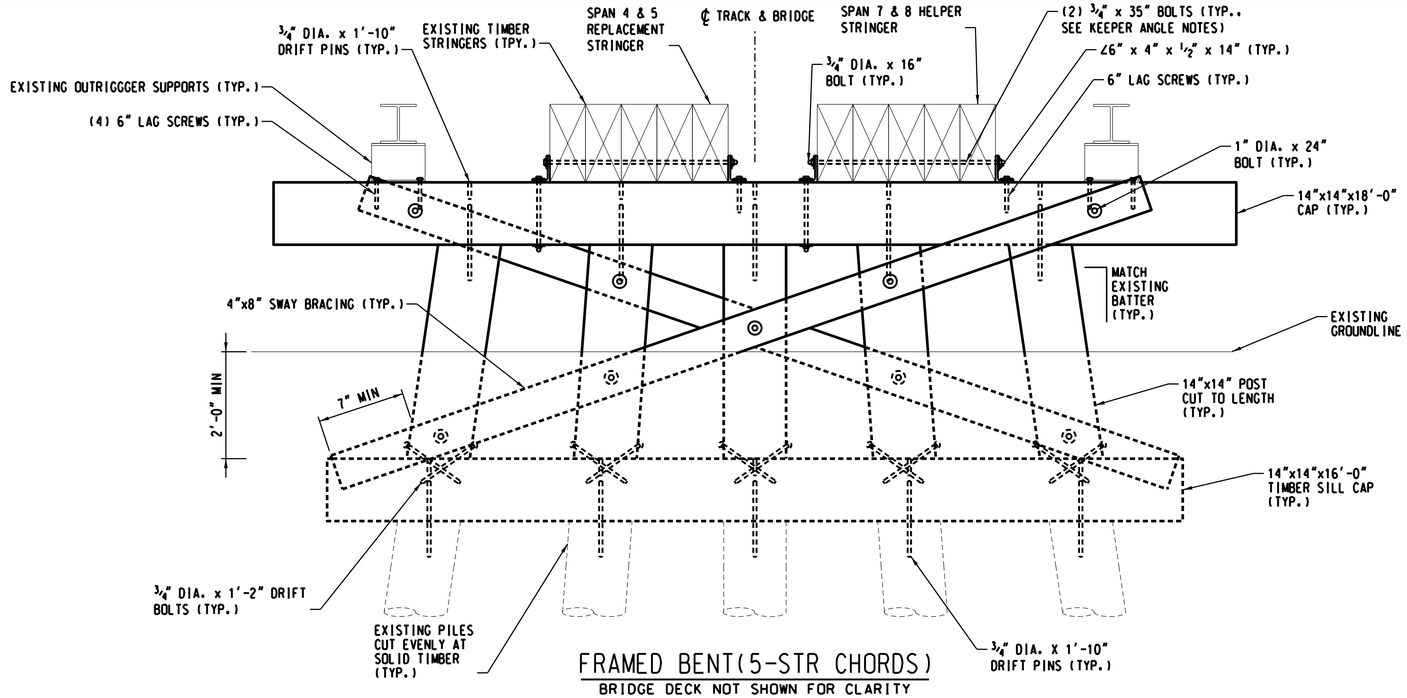

FRAMED BENT(5-STR CHORDS)

BRIDGE DECK NOT SHOWN FOR CLARITY

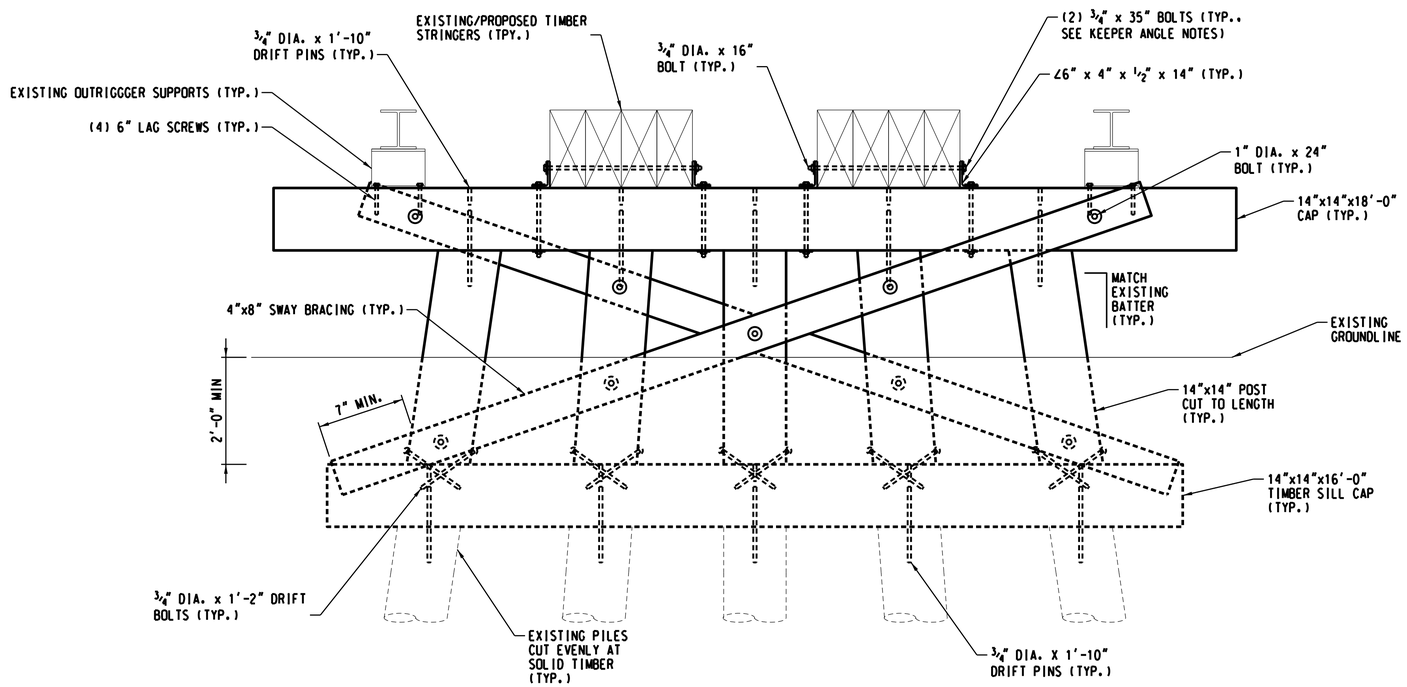

FRAMED BENT(4-STR CHORDS)

BRIDGE DECK NOT SHOWN FOR CLARITY

NOTES:

1. TREATED TIMBER SHALL BE HANDLED CAREFULLY TO AVOID EXPOSING UNTREATED INTERIOR WOOD. CANT HOOKS, PEAVIES, PIKES, OR HOOKS SHALL NOT BE USED. WHEREVER DAMAGE HAS OCCURRED TO THE TIMBER, FIELD TREATMENT SHALL BE USED.
2. ENGINEER MAY REQUIRE THE ADDITION OF LONGITUDINAL TOWER BRACING ON BRIDGES OVER 16' IN HEIGHT.
3. ALL TIMBER SHALL BE TREATED. REFER TO SMART STANDARD TIMBER SPECIFICATIONS.
4. HOLES, CUTS, AND ABRASIONS MADE IN TREATED TIMBER SHALL BE SWABBED WITH PRESERVATIVE. BOLTS SHALL BE DIPPED IN PRESERVATIVE OR BRIDGE CEMENT PRIOR TO SECURING.
5. BOLTS SHALL BE CLEANED OF RUST AND SCALE, AND DIPPED IN APPROVED SEALING COMPOUND BEFORE PLACING. ALL UNUSED HOLES SHALL BE PLUGGED AT EACH END WITH TIGHT FITTING TREATED WOODEN PLUGS.
6. ALL FASTENINGS, INCLUDING MACHINE BOLTS, DRIFT PINS, DRIFT BOLTS, LAG SCREWS, THREADED RODS, TIMBER CONNECTORS AND OTHER TYPE FASTENINGS SHALL BE PLACE IN ACCORDANCE WITH THE PLANS, DRAWN UP SECURELY AND ON COMPLETION OF THE STRUCTURE SHALL BE RETIGHTENED. UNLESS OTHERWISE SHOWN ON THE PLANS, HOLES FOR DOWELS, DRIFT PINS, OR DRIFT BOLTS SHALL BE BORED 1/16" SMALLER THAN THE NOMINAL DIAMETER OF THE DOWEL. DRIFT PIN OR DRIFT BOLT USED: HOLES SHALL NOT BE BORED DEEPER THAN THE LENGTH OF THE DOWEL, DRIFT PIN OR DRIFT BOLT. HOLES FOR MACHINE BOLTS AND THREADED RODS OTHER THAN DOWELS, DRIFT PINS OR DRIFT BOLTS SHALL BE BORED A MINIMUM OF 1/32" LARGER TO A MAXIMUM OF 1/16" LARGER THAN THE NOMINAL DIAMETER OF THE MACHINE BOLT OR THREADED ROD USED. HOLES FOR LAG SCREWS SHALL BE BORED 1/16" SMALLER THAN THE BODY OF THE SCREW AT THE BASE OF THE THREAD. ALL OTHER FASTENERS SHALL BE INSTALLED IN ACCORDANCE WITH MANUFACTURERS RECOMMENDATIONS.
7. SCREW-TYPE FASTENINGS SHALL BE SCREWED INTO PLACE FOR THE ENTIRE LENGTH OF THE FASTENING. DRIVING WITH A MAUL OR OTHER TOOL WILL NOT BE PERMITTED.
8. ALL BOLTS SHOULD BE RETIGHTENED DURING NORMAL SERVICING OF THE STRUCTURE.
9. PILING SHOULD NOT BE TRIMMED OR CUT TO FACILITATE THE FRAMING OF SWAY OR LONGITUDINAL BRACING.
10. ALL THROUGH BOLTS SHALL BE AT MINIMUM 3/4" IN DIAMETER.
11. ALL BOLTS SHOULD, AT MINIMUM, PENETRATE EACH MEMBER AT HALF THEIR LENGTH.
12. EXISTING OUTRIGGER SUPPORTS TO BE REUSED OR REPLACED IN-KIND.

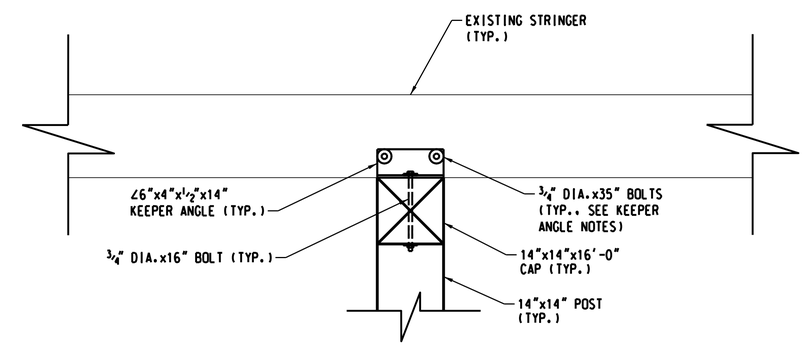

KEEPER ANGLE:

BRIDGE DECK & BENT BRACING NOT SHOWN FOR CLARITY

KEEPER ANGLE NOTES:

1. SPAN 7 AND 8 RIGHT CHORD SHALL REQUIRE 3/4" DIA. x 43" BOLTS.
2. SPAN 4 AND 5 LEFT CHORD SHALL REQUIRE 3/4" DIA. x 43" BOLTS.

ARE
6405 METCALF AVE
SUITE 503
OVERLAND PARK, KS

ENGINEER STAMP
REGISTERED PROFESSIONAL ENGINEER
DAVID REN ANDERSON
C 45458
Civil ENGINEER
STATE OF CALIFORNIA
12-31-2024

REVISIONS			
NO.:	DESCRIPTION:	BY:	DATE:

SONOMA-MARIN SMART AREA RAIL TRANSIT

DRAWN BY: SF	VAL MAP NO.:	DATE: 1/15/2025	PLAN:
APPROVED BY: DA	DRAWING NAME:	SCALE: N.T.S.	DRAWING NO.: 6 OF 6

SONOMA-MARIN AREA RAIL TRANSIT

BRIDGE MP-37.76
OVER SONOMA CREEK

TIMBER DETAILS

INVITATION FOR BID

FOR

BRAZOS RAILROAD TIMBER BRIDGE REPAIRS – PHASE II

SOLICITATION NO. FR-BB-25-001

ADDENDUM NO. 1

ISSUED JUNE 9, 2025

1	**Document**: Attachment D – Technical Plans and Specifications **Section**: Bridge MP-37.76 over Sonoma Creek General Notes, Drawing No. 1 of 6 **Page(s):** Page 6	Page 6 of Attachment D – Technical Plans and Specifications, Bridge MP-37.76 Over Sonoma Creek General Notes, Drawing 1 of 6 is hereby deleted and replaced with the Revised Bridge MP-37.76 Over Sonoma Creek General Notes, Drawing 1 of 6 attached and incorporated by this Addendum No. 1.

Questions & Answers

Q1. We are an out of state contractor. Our fleet (boom trucks, 5500 trucks) has 50 state emissions stickers on them, how are we to supply proof of this in order to comply with item 1.6 (CARB) in the specs?

A1. Please refer to Article 1 "Overview", Section 1.6 "California Air Resources Board ("CARB") Requirements" in the Invitation for Bid for Brazos Railroad Timber Bridge Repairs – Phase II. This section informs bidders of the CARB requirements. Bidders should familiarize themselves with Title 13 of the California Code of Regulations section 2449 et seq and related CARB requirements.

Additionally, please reference the "Fleet Compliance Certification" included in the "Attachment E – Bid Forms".

Q2. If submitting a bid bond as part of bid, can we upload an electronic copy as part of our bid or do you need the original? If the original is required, can we submit it within 48 hours after the due date, or do you need it before the due date?

A2. Please refer to Article 1 "Overview", Section 1.7 "Bid Guaranty" in the Invitation for Bid for Brazos Railroad Timber Bridge Repairs – Phase II. Per this section, the *original* Bid Guaranty must be received by SMART at SMART's Headquarters Office no later than the bid deadline.

Q3. Regarding the Wingo Timber Bridge at MP B37.76, is SMART planning on replacing the walkway? This may help with accessing the stringers from the top-down.

A3. SMART is not intending to replace the walkway with this project.

Q4. Regarding the Wingo Timber Bridge at MP B37.76, what are the rubber panels used for?

A4. Farm trucks and farm equipment from neighboring farms traverse this bridge to gain access to their fields. SMART, in partnership with the awarded Contractor, will coordinate and communicate the necessary access restrictions to these individuals to facilitate the bridge repair work.

Q5. Regarding the additive bid item for the Wingo Timber Bridge at MP B37.76, can SMART please clearly identify which 30 stringers are needing replacement?

A5. The Wingo Timber Bridge (MP B37.76) has a total of 32 stringers. Base Bid Item # 3 includes replacement of two of these stringers. The additive alternate bid item # 4 includes replacement of the other 30 stringers. If the Base Bid Items and Additive Bid Item is awarded, the result would be replacement of all 32 stringers.

As information, all stringers are slightly less than 30 feet in length. SMART has a total of 33 stringers available as district furnished materials.

Q6. Please clearly describe the access underneath each of the three bridges?

A6. The East end of Novato Creek Bridge MP B26.26 is typically dry by late Spring with perhaps muddy spots between piles. Foot access is typically no problem. Vertical clearance is only about 3 feet. Hyrail access can be from either the Highway 37 freight junction (West) or Grandview Avenue (East). Hyrail access from the Schellville Freight Depot yard will require turning the Blackpoint Bridge and may not be an option. There is also road vehicle access on a turnout off of Highway 37 at the exact Eastbound end of the highway bridge over Novato Creek with room for at least 4 pickup truck sized vehicles.

Sears Point Bridge MP B 34.22 is also typically dry underneath by mid Spring. Vertical clearance is approximately 5 feet. This bridge is hyrail access-only from the Schellville Freight Depot yard.

The North end of Sonoma Creek aka Wingo Bridge MP B37.76 is water access over Sonoma Creek between Bents 7 & 9. The South end of the bridge is marshy access with 3-foot to 5-foot vertical access. Hyrail access is from Schellville. Vehicle access is via Millerack Road, which is immediately South of the Easterly Highway 12 / Highway 121 Intersection.

REVISED

GENERAL NOTES

1. ALL REQUIREMENTS SHOWN ON THESE DRAWINGS SHALL BE ACCOMPLISHED AS SPECIFIED IN THE MOST CURRENT EDITION OF THE AMERICAN RAILWAY ENGINEERING AND MAINTENANCE-OF-WAY ASSOCIATION (AREMA) MANUAL FOR RAILWAY ENGINEERING.
   CHAPTER 7 TIMBER STRUCTURES
2. PROPOSED CONSTRUCTION SHOWN IN HEAVY LINES. EXISTING STRUCTURE SHOWN IN LIGHT LINES.
3. CONTRACTOR IS RESPONSIBLE TO PROVIDE A SCHEDULE FOR THE COMPLETION OF THE WORK.
4. CONTRACTOR IS RESPONSIBLE FOR THE RESTORATION AND PROPER DISPOSAL OF MATERIALS TO BE REMOVED.
5. ALL WORK DONE, AND MATERIALS FURNISHED SHALL COMPLY WITH AREMA STANDARDS AND SPECIFICATIONS.
6. CONTRACTOR IS RESPONSIBLE FOR PROVIDING ALL ACCESSORIES AND OTHER MATERIAL NEEDED FOR THE INSTALLATION OF THE NEW MEMBERS SHOWN ON THESE DRAWINGS.
7. SMART IS RESPONSIBLE FOR PROVIDING NEW TIMBER MEMBERS SHOWN ON THE PLANS.
8. CONTRACTOR SHALL FIELD VERIFY ALL DIMENSIONS AND QUANTITIES PRIOR TO CONSTRUCTION AND REPORT ANY DISCREPENCIES TO THE ENGINEER.

BILL OF MATERIAL OPTION 1

LINE	QUANT.	DESCRIPTION	SIZE	LENGTH	REMARKS
	TO BE FURNISHED BY THE RAILROAD				
1	19	TIMBER CAPS, POSTS, AND SILLS	14"x14"	20'-0"	SECTION 1
2	2	TIMBER STRINGER	16½"x8"	30'-0"	SECTION 1
3	10	SWAY BRACING	4"x8"	24'-0"	SECTION 1
4	11	TIMBER CAPS, POSTS, AND SILLS	14"x14"	20'-0"	SECTION 3
5	6	SWAY BRACING	4"x8"	24'-0"	SECTION 3
	TO BE FURNISHED BY THE CONTRACTOR				
1	110	DRIFT PINS	¾" DIA.	1'-10"	CAP - POST & SILL - PILE STUB
2	110	DRIFT BOLTS	¾" DIA.	1'-2"	POST - SILL
3	23	PACKING BOLTS - STRINGERS	¾" DIA.	43"	SECTION 1 - (5) STRINGER CHORDS
4	74	PACKING BOLT WASHERS - STRINGERS	5/16"x3"O.D.	-	CUT WASHER OR EQUIVALENT
5	44	KEEPER ANGLES	∠4"X4"X1/2"	14"	CAP - STRINGER KEEPER ANGLES
6	30	PACKING BOLTS - KEEPER ANGLES	¾" DIA.	35"	ANGLE TO STRINGER (4) STRINGER CHORDS
7	39	BOLTS - KEEPER ANGLES	¾" DIA.	16"	ANGLE TO CAP
8	156	WASHERS - KEEPER ANGLES	5/16"x3"O.D.	-	CUT WASHER OR EQUIVALENT
9	99	BOLTS - BENT BRACING	1" DIA.	24"	TRANSVERSE BRACE CXN TO CAPS/POSTS
10	198	WASHERS - BENT BRACING	5/16"x3"O.D.	-	CUT WASHER OR EQUIVALENT
11	100	TIMBER LAG SCREW	⅜" DIA.	6"	OUTRIGGER SUPPORT TO CAP/(5) STRINGER KEEPER ANGLE TO CAP

BILL OF MATERIAL OPTION 2

LINE	QUANT.	DESCRIPTION	SIZE	LENGTH	REMARKS
	TO BE FURNISHED BY THE RAILROAD				
1	19	TIMBER CAPS, POSTS, AND SILLS	14"x14"	20'-0"	SECTION 1
2	32	TIMBER STRINGER	16½"x8"	30'-0"	SECTION 1
3	10	SWAY BRACING	4"x8"	24'-0"	SECTION 1
4	11	TIMBER CAPS, POSTS, AND SILLS	14"x14"	20'-0"	SECTION 3
~~5~~	~~20~~	~~TIMBER STRINGER~~	~~16½"x8"~~	~~30'-0"~~	~~SECTION 3~~
6	6	SWAY BRACING	4"x8"	24'-0"	SECTION 3
	TO BE FURNISHED BY THE CONTRACTOR				
1	110	DRIFT PINS	¾" DIA.	1'-10"	CAP - POST & SILL - PILE STUB
2	110	DRIFT BOLTS	¾" DIA.	1'-2"	POST - SILL
3	104	PACKING BOLTS - STRINGERS	¾" DIA.	35"	STRINGER CHORDS
4	208	PACKING BOLT WASHERS - STRINGERS	5/16"x3"O.D.	-	CUT WASHER OR EQUIVALENT
5	44	KEEPER ANGLES	∠4"X4"X1/2"	14"	CAP - STRINGER KEEPER ANGLES
6	44	BOLTS - KEEPER ANGLES	¾" DIA.	16"	ANGLE TO CAP
7	156	WASHERS - KEEPER ANGLES	5/16"x3"O.D.	-	CUT WASHER OR EQUIVALENT
8	99	BOLTS - BENT BRACING	1" DIA.	24"	TRANSVERSE BRACE CXN TO CAPS/POSTS
9	198	WASHERS - BENT BRACING	5/16"x3"O.D.	-	CUT WASHER OR EQUIVALENT
10	95	TIMBER LAG SCREW	⅜" DIA.	6"	OUTRIGGER SUPPORT TO CAP

LIST OF DRAWINGS - MP37.76

DWG. NO.	TITLE
01	GENERAL NOTES
02	GENERAL PLAN & ELEVATION S1 OPTION 1
03	GENERAL PLAN & ELEVATION S1 OPTION 2
04	GENERAL PLAN & ELEVATION S3 OPTION 1
05	GENERAL PLAN & ELEVATION S3 OPTION 2
06	TIMBER DETAILS

ARE
6405 METCALF AVE
SUITE 503
OVERLAND PARK, KS

ENGINEER STAMP
REGISTERED PROFESSIONAL ENGINEER
DAVID REX ANDERSON
C 45456
CIVIL ENGINEER
STATE OF CALIFORNIA
07/15/2025

REVISIONS

NO.:	DESCRIPTION:	BY:	DATE:

SONOMA-MARIN SMART AREA RAIL TRANSIT

DRAWN BY:	VAL MAP NO.:	DATE:	PLAN:
SF		1/15/2025	
APPROVED BY:	DRAWING NAME:	SCALE:	DRAWING NO.:
DA		N.T.S.	1 OF 6

SONOMA-MARIN AREA RAIL TRANSIT

BRIDGE MP-37.76
OVER SONOMA CREEK
GENERAL NOTES

INVITATION FOR BID

FOR

BRAZOS RAILROAD TIMBER BRIDGE REPAIRS – PHASE II

SOLICITATION NO. FR-BB-25-001

ADDENDUM NO. 2

ISSUED JUNE 17, 2025

1	**Document**: Attachment D – Technical Plans and Specifications **Section**: Brazos Junction Branch Bridge MP-26.26 Stringers and Bents, Drawing No. 1 of 6 **Page(s):** Page 1	Page 1 of Attachment D – Technical Plans and Specifications, Brazos Junction Branch Bridge MP-26.26 Stringers and Bents, Drawing No. 1 of 6 is hereby deleted and replaced with the Revised Brazos Junction Branch Bridge MP-26.26 Stringers and Bents, Drawing No. 1 of 6 attached and incorporated by this Addendum No. 2.
2	**Document**: Attachment D – Technical Plans and Specifications **Section**: Bridge MP-34.22 General Notes, Drawing No. 1 of 4 **Page(s):** Page 2	Page 2 of Attachment D – Technical Plans and Specifications, Bridge MP-34.22 General Notes, Drawing No. 1 of 4 is hereby deleted and replaced with the Revised Bridge MP-34.22 General Notes, Drawing No. 1 of 4 attached and incorporated by this Addendum No. 2.

Questions & Answers

Q1. When picking up owner-furnished materials that is stored at the Schellville yard, is the contractor responsible for providing a forklift to load out the materials?

A1. Yes. There is no equipment available in the yard.

Q2. Can the Schellville Yard be used by the contractor to set up conex box for job related tools and miscellaneous materials?

A2. Yes.

Q3. Is there a bill of materials list to be furnished by the contractor for the Novato Creek Bridge? and/or is there a detail showing how the stringers to be installed and the hardware needed (bolts/nuts etc.)

A3. The existing bolts are to be reinstalled, so there is no bill of materials. Please see the revised Brazos Junction Branch Bridge MP-26.26 Stringers and Bents, Drawing No. 1 of 6 attached to this Addendum No. 2 that incorporates this note. SMART does not have additional detail on how to replace the stringers available.

Q4. Regarding Section 2.10 of the Invitation for Bid, Section 2.10 requires that the contractor warrants that all materials furnished are fit for the purpose intended and fulfills its design functions; are free of all patent and latent defects in design, materials, and workmanship. Additionally, the general conditions, Section 9.1, requires that the contractor warrant the materials for its intended use, and free from defects in design, architecture and/or engineering, materials, construction and workmanship. Given the materials are being provided by SMART per section 1.1(B) of the IFB, and that contractor has not performed the design, architecture, or engineering of the project, will SMART consider removing this fitness for purpose and fulfillment of design functions requirement, as well any warranty requirements with respect to design, architecture, and engineering. These requirements fall outside of industry standards, and places an undue burden on the contractor by holding the contractor to a warranty requirement over aspects of the Work for which it has no control, and did not perform.

A4. Contractor is not required to provide warranty on owner-furnished materials. Contractor shall provide warranty for workmanship and any materials supplied by the Contractor.

Q5. Regarding Section 7.5 of the Invitation for Bid, please confirm that SMART shall be considered the Generator for any pre-existing hazardous waste encountered during performance of the Work.

A5. Confirmed that SMART is considered the Generator for pre-existing hazardous waste encountered during the performance of the Work.

Q6. Regarding Section 14 of Attachment C - General Conditions, will SMART allow for compensation for unforeseen increases in cost related to tariffs?

A6. SMART suggests pricing materials based on current market conditions. SMART may allow for price adjustments for orders that are directly affected by tariffs, provided there is adequate documentation of the tariff and its impact on pricing by the supplier.

Q7. Regarding Section 13.11 of Attachment C - General Conditions, will SMART consider a dual limitation of liability with respect to special, consequential, and incidental damages?

A7. No.

Q8. Regarding Owner Furnished Materials on Page 5 of the Invitation for Bid, this section gives a list of Owner-Furnished materials. Plansheet 1 of 4 Bridge MP-34.22, and 1 of 6 Bridge MP-37.76 show significantly more timber material than page 5 of the IFB as being supplied by the Owner / Railroad. Line 3 on Page 1 of 4 Bridge MP-34.22 for instance, shows 36 timber ties 71/2"x8" by 9'-0" as being supplied by the Railroad that does not appear on Page 5 of the IFB. Please confirm the list on Page 5 is not a complete list and that the timber materials to be supplied by the Railroad on the plansheets are correct.

A8. SMART will only provide the large timbers listed on Page 5 of the Invitation for Bid. All other incidental timber material, including the 36 each, 7-1/2" x 8" x 9' timber ties, shall be procured and supplied by Contractor.

Page 2 of Attachment D – Technical Plans and Specifications, Bridge MP-34.22 General Notes, Drawing No. 1 of 4 is hereby deleted and replaced with the Revised Bridge MP-34.22 General Notes, Drawing No. 1 of 4 attached and incorporated by this Addendum No. 2.

Q9. Regarding the Bid Item Descriptions listed on Page 5 of Attachment E - Bid Forms (FR-BB-25-001), Plansheets "5.Att.D-Technical Plans and Specifications (FR-BB-25-001) show more work and materials generally than what is described on Page 5 of the Attachment E - Bid Forms (FR-BB-25-001) document and the Invitation for Bid for Brazos Railroad Timber Bridge Repairs - Phase II document. Please confirm the work in the plans takes precedence over any written descriptions for scope of work in the Invitation for Bid documents.

A9. Confirmed that work in the plans takes precedence over written descriptions for scope of work in the Invitation for Bid document.

REVISED

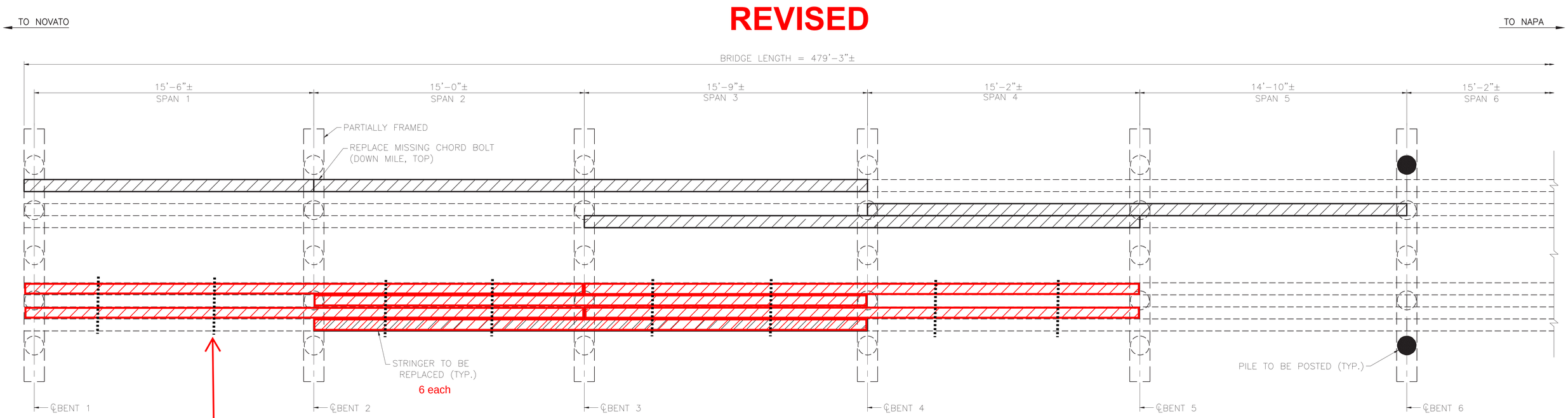

PLAN (STRINGERS & BENTS)
(SPANS 1–5)
⅜" = 1'-0"

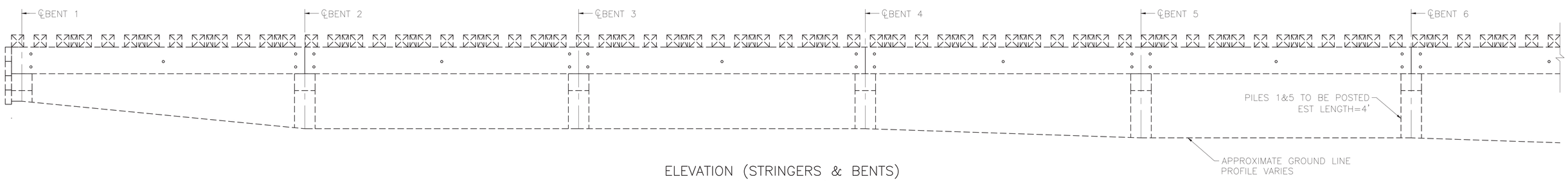

ELEVATION (STRINGERS & BENTS)
(SPANS 1–5)
⅜" = 1'-0"

BRIDGE LOCATION
LATITUDE: 38.086434°
LONGITUDE: −122.535166°

LEGEND

▨ –TO BE REPLACED

● –PILE TO BE POSTED

Updated December 2024 by SMART for stringer replacements per 2024 ARE bridge inspection report.

Revision 1 - 06/11/2025 SMART

REGISTERED PROFESSIONAL ENGINEER
DAVID REX ANDERSON
C 45458
CIVIL ENGINEER
STATE OF CALIFORNIA
10-03-2022

ARE
300 E.39TH STREET,
KANSAS CITY, MO

REVISIONS			
NO.:	DESCRIPTION:	BY:	DATE:

SONOMA-MARIN SMART AREA RAIL TRANSIT

DRAWN BY:	DATE:	DESIGNED BY:	DATE:
JA	9/27/2022	MM	7/06/2022
APPROVED BY:	DATE:	SCALE:	DRAWING NO.:
DA	9/29/2022	AS SHOWN	1 OF 6

SONOMA–MARIN AREA RAIL TRANSIT
BRAZOS JUNCTION BRANCH
BRIDGE MP–26.26
STRINGERS AND BENTS

REVISED

GENERAL NOTES

1. ALL REQUIREMENTS SHOWN ON THESE DRAWINGS SHALL BE ACCOMPLISHED AS SPECIFIED IN THE MOST CURRENT EDITION OF THE AMERICAN RAILWAY ENGINEERING AND MAINTENANCE-OF-WAY ASSOCIATION (AREMA) MANUAL FOR RAILWAY ENGINEERING.
   CHAPTER 7 TIMBER STRUCTURES
2. NEW CONSTRUCTION SHOWN IN HEAVY LINES. EXISTING STRUCTURE SHOWN IN LIGHT LINES.
3. CONTRACTOR IS RESPONSIBLE TO PROVIDE A SCHEDULE FOR THE COMPLETION OF THE WORK.
4. CONTRACTOR IS RESPONSIBLE FOR THE RESTORATION AND PROPER DISPOSAL OF MATERIALS TO BE REMOVED.
5. ALL WORK DONE, AND MATERIALS FURNISHED SHALL COMPLY WITH AREMA STANDARDS AND SPECIFICATIONS.
6. CONTRACTOR IS RESPONSIBLE FOR PROVIDING ALL ACCESSORIES AND OTHER MATERIAL NEEDED FOR THE INSTALLATION OF THE NEW MEMBERS SHOWN ON THESE DRAWINGS.
7. SMART IS RESPONSIBLE FOR PROVIDING NEW TIMBER MEMBERS SHOWN ON THE PLANS.
8. CONTRACTOR SHALL FIELD VERIFY ALL DIMENSIONS PRIOR TO CONSTRUCTION AND REPORT ANY DISCREPENCIES TO THE ENGINEER.

BILL OF MATERIAL

LINE	QUANT.	DESCRIPTION	SIZE	LENGTH	COMMENTS
	TO BE FURNISHED BY THE RAILROAD				
1	4	TIMBER CAP	14"x14"	20'-0"	CUT TO LENGTH
2	6	TIMBER STRINGER	17 1/2"x8"	30'-0"	CUT TO LENGTH
~~3~~	~~36~~	~~TIMBER TIES~~	~~7 1/2"x8"~~	~~9' 0"~~	
~~4~~	~~13~~	~~TIMBER OUTRIGGERS~~	~~4"x7 1/4"~~	~~18' 0"~~	
	TO BE FURNISHED BY THE CONTRACTOR				
1	18	DRIFT BOLTS	3/4" DIA.	1'-10"	CAP - CAP CONNECTIONS & CAP - PILE CONNECTIONS
2	4	PACKING BOLTS - STRINGERS	3/4" DIA.	43"	SPAN 1 LEFT STRINGER CHORD
3	8	PACKING BOLT WASHERS - STRINGERS	5/16"x3"O.D.	-	CUT WASHER OR EQUIVALENT
4	15	KEEPER ANGLES	∠4"x4"x1/2"	14"	CAP - STRINGER KEEPER ANGLES
5	15	BOLTS - KEEPER ANGLES	3/4" DIA.	10"	
6	30	WASHERS - KEEPER ANGLES	5/16" x 3" O.D.	-	CUT WASHER OR EQUIVALENT
7	46	WASHER HEAD DRIVE SPIKES	11/16" DIA.	10"	THROUGH TIE SPACER
8	36	TIMBER TIES	7-1/2" x 8"	9'-0"	

LIST OF DRAWINGS - MP34.22

DWG. NO.	TITLE
01	GENERAL NOTES
02	GENERAL PLAN & ELEVATION
03	DECK PLAN
04	TIMBER DETAILS

ARE
6405 METCALF AVE
SUITE 503
OVERLAND PARK, KS

ENGINEER STAMP
REGISTERED PROFESSIONAL ENGINEER
DAVID WES ANDERSON
C 45458
CIVIL ENGINEER
STATE OF CALIFORNIA
12/20/2024

REVISIONS			
NO.:	DESCRIPTION:	BY:	DATE:

SONOMA-MARIN SMART AREA RAIL TRANSIT

DRAWN BY: SF	VAL MAP NO.:	DATE: 1/13/2025	PLAN:	SONOMA-MARIN AREA RAIL TRANSIT
APPROVED BY: DA	DRAWING NAME:	SCALE: N.T.S.	DRAWING NO.: 1 OF 4	BRIDGE MP-34.22 GENERAL NOTES

INVITATION FOR BID

FOR

BRAZOS RAILROAD TIMBER BRIDGE REPAIRS – PHASE II

SOLICITATION NO. FR-BB-25-001

ADDENDUM NO. 3

ISSUED JUNE 27, 2025

Note: This Addendum No. 3 modifies the procurement schedule and extends the bid deadline to July 8, 2025.

<table>
<tr>
<td>1</td>
<td>Document: Invitation for Bid for Brazos Railroad Timber Bridge Repairs – Phase II

Section: Article 1 “Notice Inviting Bids”, Section 1.12 “Procurement Schedule”

Page: Page 13</td>
<td>Article 1 “Notice Inviting Bids”, Section 1.12 “Procurement Schedule” is hereby deleted and replaced with the revised procurement schedule below. Any reference made to the procurement schedule and timeline in the solicitation documents shall now refer to the procurement schedule identified below:

1.12 Procurement Schedule

The Procurement Schedule is listed below and is subject to change at the sole discretion of the District.
<table>
<tr><th>Date</th><th>Event</th></tr>
<tr><td>May 27, 2025</td><td>Issue Invitation for Bid</td></tr>
<tr><td>June 5, 2025</td><td>Pre-Bid Meeting (Virtual), 10:00 AM (Pacific)</td></tr>
<tr><td>June 16, 2025</td><td>Deadline for Questions, 2:00 PM (Pacific)</td></tr>
<tr><td>June 27, 2025</td><td>Final Addendum Issued by SMART</td></tr>
<tr><td>July 8, 2025</td><td>Bids Due to SMART, 2:00 PM (Pacific)</td></tr>
<tr><td>July 8, 2025</td><td>Public Bid Opening, 2:30 PM (Pacific)</td></tr>
<tr><td>July 8, 2025</td><td>Notice of Apparent Low Bidder Issued</td></tr>
<tr><td>July 8, 2025 – July 25, 2025</td><td>Evaluation of Bids</td></tr>
<tr><td>July 25, 2025</td><td>Notice of Intent to Award Issued</td></tr>
</table>
</td>
</tr>
</table>

		August 20, 2025 — Board of Director Review (As Required) August 21, 2025 — Award Agreement
2	**Document**: Invitation for Bid for Brazos Railroad Timber Bridge Repairs – Phase II **Section**: Article 2 “Instructions to Bidders”, Section 2.10 “Warranty of Fitness” **Page:** Page 19	Article 2 “Instructions to Bidders”, Section 2.10 “Warranty of Fitness” is hereby deleted and replaced with the following: “By submitting a bid, Bidder warrants to SMART that all materials furnished meet the requirements and conditions required by SMART under this Solicitation; are free of all patent and known latent defects; and perform satisfactorily. Contractor is not required to provide warranty on owner-furnished materials. Contractor shall provide warranty for Contractor’s workmanship and any materials supplied by the Contractor. For purposes of this Bid, this warranty section is not intended to extend to engineering or design services that are being provided by others.”